HULL NO: S5130	MESSRS : SPP SHIPBUILDING CO.,LTD.	Rev. 5

ITEM :

LOCAL GROUP STARTER
& INDIVIDUAL STARTER

KINDS OF SHIP :	DWT 49,999 TON PRODUCT OIL/CHEMICAL TANKER	CLASS :	DNV
		DRAWING NO. :	HME-SPP5130-LGSP
SHIP OF OWNER :	BW EGERT	APPROVED BY	S.H.GOO
MAKER :	HME	CHECKED BY	S.D.EOM
		DESIGNED BY	S.H.PARK

PLAN HISTORY

REV.	DATE	DESCRIPTION
0	JUL. 22. 13'	ISSUED FOR APPROVAL (LAYOUT ONLY)
0	JUL. 29. 13'	ISSUED FOR SHIPYARD COMMENT (LAYOUT COMMENT)
0	AUG. 05. 13'	ISSUED FOR APPROVAL (FULL DWG)
1	JAN. 16. 14'	ISSUED FOR SHIPYARD APPROVAL COMMENT
2	APR. 04. 14'	ISSUED FOR SHIPYARD APPROVAL COMMENT : ADDED NO.1/2 MAIN C.S.W PUMP RPB (P9905,P9906) (SHEET NO.: RPB05) : DESIGN DEVELOPMENT FOR PURIFIRE CIRCUIT (SHEET NO. : SD201, SD203, SD205, SD207, TB01, TB02)
3	MAY. 08. 14'	ISSUED FOR SHIPYARD COMMENT : CT2 FOR PURIFIRE ROOM EXH. FAN IS ADDED & NAME OF CO2 TRIP IS CHANGED CT TO CT1 (SHEET NO.: NP2-1,NP11,SD209)
4	SEP. 18. 14'	ISSUED FOR SHIPYARD APPROVAL COMMENT : DESIGN DEVELOPMENT FOR NO.1/2 MAIN C.S.W PUMP RPB (P9905,P9906) (SHEET NO. : RPB05A, RPB05B)
5	OCT. 27. 14'	ISSUED FOR SHIPYARD APPROVAL COMMENT : CHANGED SHIP TYPE & FLAG & SHIP OWNER (SHEET NO. : COVER, G03)

REV.	DATE	DESCRIPTION

ITEM NO.	CONTENTS	SHEET NO.
1	PLAN HISTORY	G01
2	INDEX	G02
3	GENERAL SPECIFICATION	G03
4	LEGEND OF DRAWINGS	
5	SYMBOLS LIST	G04~G10
6	AUX. RELAY LIST	
7	PART LIST	SP1~SP3
8	SPECIFICATION OF NAME PALTE	NP1~NP11
9	GROUP ALARM & GROUP REPOSE LIST	
10	BASIC ALARM FORM	
11	FLOW CHART	
12	ALARM & INDICATOR LAMP LIST	
13	OUTLINE VIEW	L01~L06 RPB01~EPB14
14	TERMINAL AND PIPING POSITION DIAGRAM	
15	COMPONENT ARRANGEMENT	
16	SMALL BOX AND MAKER DRAWING	
17	POWER SOURCE CIRCUIT	
18	COMMON CIRCUIT	SD101~SDI01
19	INDICATION LAMP CIRCUIT	
20	ALARM LAMP CIRCUIT	
21	EXTENSION ALARM CIRCUIT	
22	CONTROL CIRCUIT	
23	INSTRUMENTS CIRCUIT	
24	PAINT COLOR COMPARTMENT	
25	TERMINAL ARRANGEMENT	TB01~TB03

0	1	2	3	4	5	
6	7	8	9	10	11	

PROJECT No.	S5130	TITLE	INDEX
HME		SHEET No.	G02

GENERAL SPECIFICATION

GENERAL	SHIP OWNER	BW EGRET	FLAG	SINGAPORE
	KIND OF SHIP	DWT 49,999 TON PRODUCT OIL/CHEMICAL TANKER	CLASSIFICATION	DNV
	SHIP NO.	S5130		

PANEL CONSTRUCTION	TYPE	☑ WALL MOUNTING ☑ SELF STANDING	ENCLOSURE	☑ IP 22 ☑ IP 44 ☐ IP 56
	SIDE COVER	☐ WITH ☐ WITHOUT	FOUNDATION	☐ YARD SUPPLY ☐ MAKER SUPPLY
	FRONT COVER	☑ HINGED TYPE ☐ HOOKED TYPE ☐ HINGED & HOOKED TYPE ☑ N/A	REAR COVER	☐ HINGED TYPE ☐ HOOKED TYPE ☐ HINGED & HOOKED TYPE ☑ N/A
	PAINT COLOR	MUNSELL NO. 7.5 BG 7/2	MATERIAL	STEEL 2.3t
ENVIRONMENT	TEMPERATURE	45 °C	HUMIDITY	
DRAWING & DOCMENT	LANGUAGE	☑ ENGLISH ☐ KOREAN ☐ ENG. + KOR.		
NAME PLATE	LANGUAGE	☑ ENGLISH ☐ KOREAN ☐ ENG. + KOR.	MATERIAL	☑ PHENOLIC ☐ SUS304 ☑ ALUMINUM ☐ BRASS

		MATERIAL	COATING	IDENTIFICATION				ARRANGEMENT		
ELECTRIC SPECIFICATION	BUS BAR	COPPER	☑ TIN	AC	R :	☑ RED	☐ GREEN	LEFT	TOP	FRONT
			☐ SILVER		S :	☑ WHITE	☐ YELLOW	↓	↓	↓
			☐ N/A		T :	☑ BLUE	☐ BROWN	RIGHT	BOTTOM	REAR
	INTERNAL WIRING	POWER CIRCUIT : 660V SCP CONTROL CIRCUIT : 0.6/1KV UL1015 AWG17		DC	P :	☑ RED	☐ WHITE			
					N :	☑ BLUE	☐ BLACK			

SCOPE OF SUPPLY	1) GROUP STARTER PANEL		
	2) INDIVIDUAL STARTER PANEL		
	3) REMOTE PUSH BUTTON BOX		
	4) EM'CY PUSH BUTTON BOX		

PROJECT No.	S5130	TITLE	INDEX
HME		SHEET No.	G03

SYMBOL LIST

No.	SECTION	SYMBOL	DESCRIPTION
01	MACHINERY	G	AC GENERATOR
02		M	AC MOTOR
03		GM	GOVERNOR MOTOR
04			
05			
06	METER	V	AC VOLT METER
07		A	AC AMMETER
08		W	AC WATTMETER
09		F	AC FREQUENCY METER
10		IM	INSULATION RESISTANCE METER
11		RHM	RUN HOUR METER
12		SY	SYNCHROSCOPE
13			
14			
15	PROTECTION DEVICE	ACB ACB	AIR CIRCUIT BREAKER (DRAW-OUT TYPE)
16		ACB ACB	AIR CIRCUIT BREAKER (FIXED TYPE)
17			MOLDED CASE CIRCUIT BREAKER
18		F F	FUSE
19		DS DS	DISCONNECTION SWITCH
20			
21			

No.	SECTION	SYMBOL	DESCRIPTION
22	RELAY	a-b	COIL OF MAGNETIC & AUXILIARY RELAY (a : PAGE NO b : SERIAL NO)
23			
24		T a-b	COIL OF TIME-LAG RELAY (a : PAGE NO b : SERIAL NO)
25			
26			THERMAL RELAY
27	CONTACT		"a" CONTACT (NORMALLY OPEN)
28			"b" CONTACT (NORMALLY CLOSE)
29			"c" CONTACT (TRANSFER)
30			"a" CONTACT OF TIME-LAG RELAY (ON DELAY)
31			"b" CONTACT OF TIME-LAG RELAY (ON DELAY)
32			FLICKER CONTACT
33			"a" CONTACT FOR PUSH BUTTON
34			"b" CONTACT FOR PUSH BUTTON
35			"a" CONTACT FOR REMAINING CONTACT
36			"b" CONTACT FOR REMAINING CONTACT
37			"a" CONTACT FOR RESETING CONTACT
38			"b" CONTACT FOR RESETING CONTACT
39			"a" CONTACT FOR MECHANICAL CONTACT
40			"b" CONTACT FOR MECHANICAL CONTACT
41			
42			

PROJECT No.	S5130	TITLE	SYMBOL LIST
HME		SHEET No.	G04

0 1 2 3 4 5
6 7 8 9 10 11

SYMBOL LIST

No.	SECTION	SYMBOL	DESCRIPTION
43	WIRE		CLOSSING ELECTRIC WIRE
44			CONNECTION OF ELECTRIC WIRE
45			
46			
47	TERMINAL BLOCK		TERMINAL FOR OUSIDE WIRING
48			TERMINAL OF PARTS
49			
50			
51	COIL	UVT	UNDER VOLTAGE TRIP COIL
52		SHT	SHUNT TRIP COIL
53			
54			
55	SWITCH		CAM SWITCH
56		2 1 4 3	TRANSFER SWITCH
57			
58			
59	TRANSFORMER	TR	TRANSFORMER
60		PT	POTENTIAL TRANSFORMER
61		CT	CURRENT TRANSFORMER
62			
63			

No.	SECTION	SYMBOL	DESCRIPTION
64	LAMP	aLb	PILOT LAMP (a : COLOR b : SERIAL NO(1~n)
65			
66			
67			
68		B	BATTERY
69			DIODE
70			EARTH
71			COORDINATES
72			
73			
74			
75			
76			
77			
78			
79			
80			
81			
82			
83			
84			

PROJECT No.	S5130	TITLE	SYMBOL LIST
HME		SHEET No.	G05

0	1	2	3	4	5
6	7	8	9	10	11

AUX. RELAY LIST

TYPE	CONNECTION
UMC9 UMC12 (1a or 1b)	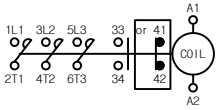
UMC18 UMC25 UMC32	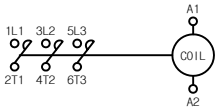
UMC40 UMC50 UMC65	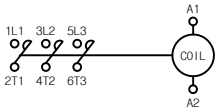
UMC75 UMC80 UMC100	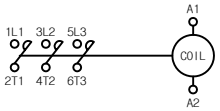
UMC115 UMC130 UMC150 (2a+2b)	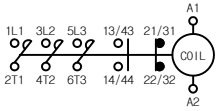
UMC185 UMC225 UMC265 (2a+2b)	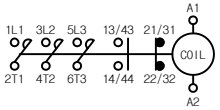

TYPE	CONNECTION
UMX31 (3a+1b)	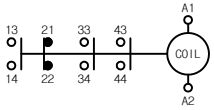
UAB22 (2a+2b)	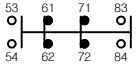
UAB31 (3a+1b)	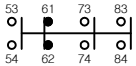
UAL65 UAL100 UAL400 (1a+1b)	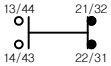
UAL400A (1a+1b)	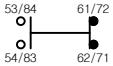
UAL65D UAL100D (1a+(1b))	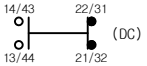

TYPE	CONNECTION
SBT-44Y (2C)	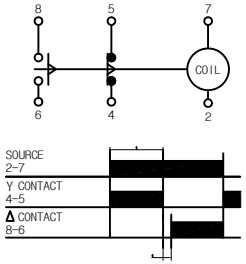
HR705-4PL (4C)	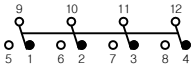
H3CR-H8L (2C)	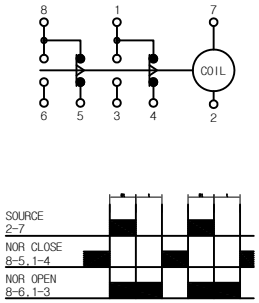

TYPE	CONNECTION
H3BA-N8H (2C & INST)	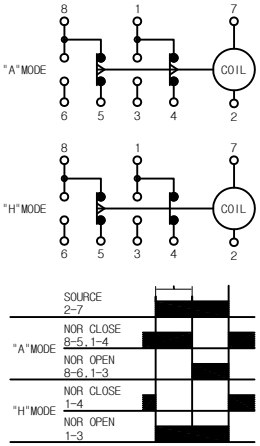
H3BA-N (2C)	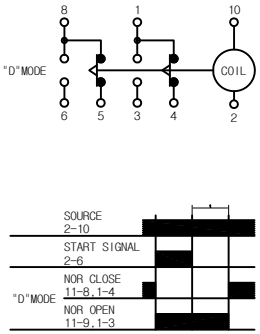

0	1	2	3	4	5						
6	7	8	9	10	11						

PROJECT No.	S5130	TITLE	SYMBOL LIST
HME		SHEET No.	G06

LEGEND OF DRAWINGS

1. Description of the symbols for wiring part.

ex 1)

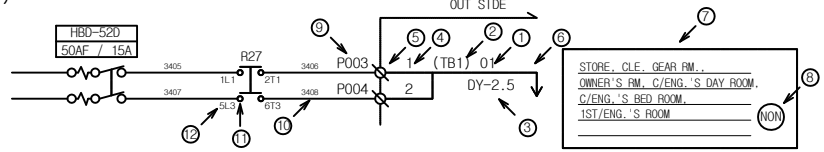

① It means the CIRCUIT NO. of the external yard cable.

② It means the name of the terminal group connected to external.
It is also indicated in the drawing of Terminal block arrangement.

③ It means the SPECIFICATION of the external yard cable.

④ It means the CORE NO. of the external yard cable.

⑤ It means the terminal block connected to the external yard cable.
If the part connected to the external yard cable is close to the cable entrance and easy to connect the yard cable, Not to set it is possible.
An example for APPLICATION is as follws:

ex 2)

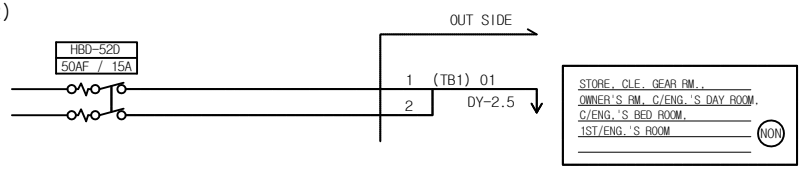

⑥ It means the entrance to the external yard cable.
The forms of expression is as follows:

↓ : LOWER ↑ : UPPER

⑦ It is a description of the external equipment connected.

⑧ It means the kind of the circuit to be composed.
The forms of expression is as follows:

NON : NOT APPLICATION SHT : SUNT TRIP UVT : UNDER VOLTAGE TRIP
ES : EM'CY STOP

⑨ It means the name of the terminal block connected and the external yard cable.

⑩ It is the name of the internal cable. All internal cable has the name of their own.
The forms of expression is as follows:

10-1) POWER CIRCUIT

In case of AC, [a] R [b] [a] S [b] [a] T [b]

In case of DC, [a] P [b] [a] N [b]

a: Voltage classification

0 --- 400 - 460V
1 --- 100 - 115V
2 --- 200 - 230V
3 --- 380V
4 --- 22 - 32V
5 --- 21 - 1V

b: Serial No. (1-n)

10-2) CONTROL CIRCUIT

[a] [b] a: Page on which the connection diagram is given (01 ~ 99)
b: Serial No. (01 ~ 99)

⑪ It means the terminal block of the internal part.

⑫ It means the terminal block name of the internal part.

PROJECT No.	S5130	TITLE	REGEND OF DRAWING
	HME	SHEET No.	G07

0	1	2	3	4	5
6	7	8	9	10	11

2. Description of the symbols for switch & lamp.

KIND OF PART	SYMBOL	NAME DESCRIPTION	COLOR
LAMP	Fill the color related on this	a L b a : color b : Serial No.(1 ~ n)	R -- RED W -- WHITE G -- GREEN O -- ORANGE
SWITCH		PB b a : color b : Serial No.(1 ~ n)	R -- RED B -- BLUE G -- GREEN
SWITCH WITH LAMP		a LP b a : color b : Srial No.(1 ~ n)	R -- RED W -- WHITE G -- GREEN O -- ORANGE
CHANGE OVER SWITCH		COS b a : color b : Serial No.(1 ~ n)	R -- RED B -- BLACK
SELECT SWITCH		CS b a : color b : Serial No.(1 ~ n)	R -- RED B -- BLACK
NOTE.	If a given lamp is with two bulbs of different colors, it is indicated by a composition like "RGL" ⟹ RL & GL		

3. Coordinates

The coordinates is used to link the cutoff of the wiring drawing, when decoding the drawing, it is possible to grasp the continuous flow of the wiring drawing through it.

1) Coordinates application in wiring part

ex 1)

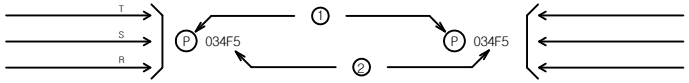

① It is the signal for the coordinates existing.

② It indicates a direction indicated by the coordinates.

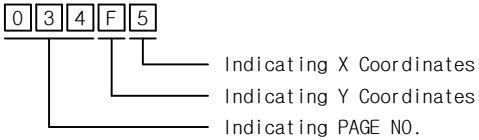

2) Coordinates application in relay contact part

ex 2)

HMX22(4-5)

A	B
04/1A	
04/2A	
	04/1A

Above is the relay contact table.

2-1) As no.9 and no.5 are contact A of 24-1, they indicate that 31 page/ X coordinates : B / Y coordinates : 4 is located.

2-2) As no.10 and no.2 are contact B of 24-1, they indicate that 31 page/ X coordinates : B / Y coordinates : 6 is located.

PROJECT No.	S5130	TITLE	REGEND OF DRAWING
	HME	SHEET No.	G08

NAME PLATE MODEL LIST

SECTION	DESIGN	TYPE	DEMENSION				COLOR		MATERIAL	REMARK
			H	L	D	T	LETTER	GROUND		
PANEL	HOLE SIZE : 4.5mm 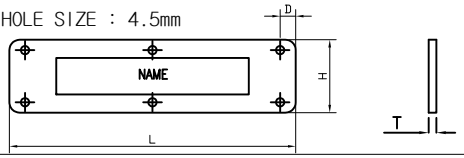	TYPE-MA	50	300	5	2	☐ BLACK	■ BLACK	■ PHENOLIC	
		TYPE-MB	60	200	5	2	■ WHITE	☐ WHITE	☐ ALUMINUM	
		TYPE-MC	40	150	5	2				
FEEDER CIRCUIT (2P)	HOLE SIZE : 4.5mm 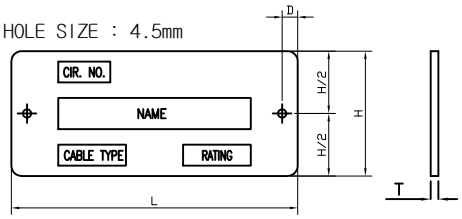	TYPE-2A	30	100	5	2	☐ BLACK	■ BLACK	■ PHENOLIC	
		TYPE-2B	40	90	5	2	■ WHITE	☐ WHITE	☐ ALUMINUM	
FEEDER CIRCUIT (4P)	HOLE SIZE : 4.5mm 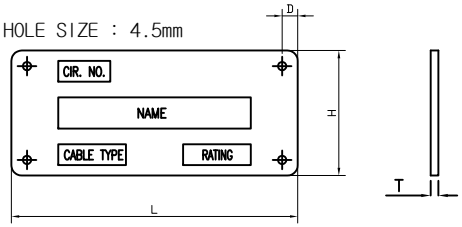	TYPE-4A	60	90	5	2	☐ BLACK	■ BLACK	■ PHENOLIC	NOT USED
		TYPE-4B	80	90	5	2	■ WHITE	☐ WHITE	☐ ALUMINUM	
		TYPE-4C	40	150	5	2				
FUSE CIRCUIT	HOLE SIZE : 3.5mm 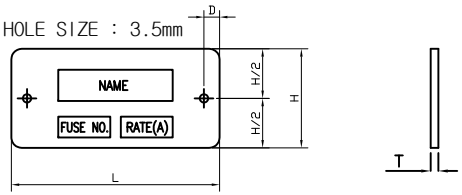	TYPE-FA	30	60	4	2	☐ BLACK	■ BLACK	■ PHENOLIC	NOT USED
		TYPE-FB	25	45	4	2	■ WHITE	☐ WHITE	☐ ALUMINUM	
PARTS	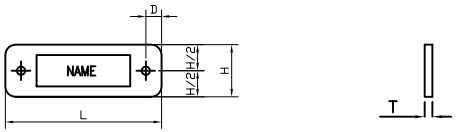	TYPE-PA	20	60	4	2	☐ BLACK	■ BLACK	■ PHENOLIC	
		TYPE-PB	25	100	5	2	■ WHITE	☐ WHITE	☐ ALUMINUM	

PROJECT No. S5130		TITLE	SPECIFICATION OF NAME PLATE
HME		SHEET No.	NP1

0	1	2	3	4	5
6	7	8	9	10	11

LGSP NAME PLATE

NO.	TYPE	FEEDER DESCRIPTION: FEED CIRCUIT NO. / CABLE TYPE	FRAME /RATING	FEEDER NAME	Q'TY	EM'CY & PREF. TRIP / CABLE ENTRANCE
01	MB			NO.1 LOCAL GROUP STARTER PANEL	1	
02	2B	P6701 / T-2	100/15A	NO.1 F.W HYD. PUMP	1	L
03	2B	P6711 / T-2	100/15A	HOT WATER CIRC. PUMP	1	L
04	2B	P6721 / T-2	100/15A	F.W PUMP FOR W/H PACKAGE AIR CON.	1	L
05	2B	P6731 / T-2	100/15A	NO.1 D.W HYD. PUMP	1	L
06	2B	P6801 / T-2	100/15A	NO.2 F.W HYD. PUMP	1	L
07	2B	P6821 / T-10	100/30A	HOT WATER CALORIFIER	1	L
08	2B	P6811 / T-2	100/15A	NO.2 D.W HYD. PUMP	1	L
09	MB			NO.2 LOCAL GROUP STARTER PANEL	1	L
10	2B	P6901 / T-2	100/15A	NO.1 H.F.O PURIFIER	1	L
11	2B	P6921 / T-2	100/15A	NO.1 H.F.O PURIFIER SUPPLY PUMP	1	L
12	2B	P6911 / T-2	100/15A	NO.1 L.O PURIFIER	1	L
13	2B	P6931 / T-2	100/15A	NO.1 L.O PURIFIER SUPPLY PUMP	1	L
14	2B	P7001 / T-2	100/15A	NO.2 H.F.O PURIFIER	1	L
15	2B	P7021 / T-2	100/15A	NO.2 H.F.O PURIFIER SUPPLY PUMP	1	L
16	2B	P7011 / T-2	100/15A	NO.2 L.O PURIFIER	1	L
17	2B	P7031 / T-2	100/15A	NO.2 L.O PURIFIER SUPPLY PUMP	1	L
18	2B	P7101 / T-2	100/15A	PURIFIER ROOM EXH. FAN	1	ES1+CT1+CT2 / L
19	MB			NO.3 LOCAL GROUP STARTER PANEL	1	L
20	2B	P7201 / T-2	100/15A	L.O TRANS. PUMP		

* NOTE
1. CABLE ENTRANCE
   - L : LOWER & SIDE, U : UPPER
2. LETTER MARKED WITH [ ] ARE NOT WRITTEN OF NAME PLATE.

PROJECT No.	S5130	TITLE	NAME PLATE LIST (LGSP)
	HME	SHEET No.	NP2-1

LGSP NAME PLATE

NO.	TYPE	FEEDER DESCRIPTION: FEED CIRCUIT NO. / CABLE TYPE	FEEDER DESCRIPTION: FRAME /RATING	FEEDER DESCRIPTION: FEEDER NAME	Q'TY	EM'CY & PREF. TRIP / CABLE ENTRANCE
21	2B	P7211 / T-2	100/15A	SLUDGE PUMP	1	L
22	2B	P7301 / T-2	100/15A	OILY WATER SEPARATOR CONTROL PANEL	1	L
23	MB			NO.4 LOCAL GROUP STARTER PANEL	1	
24	2B	P7401 / T-2	100/15A	GALLEY EXH. FAN	1	ES3+ES5 / L
25	2B	P7411 / T-2	100/15A	GALLEY SUPPLY FAN	1	ES3+ES5 / L
26	2B	P7421 / T-2	100/15A	SANITARY SPACE EXH. FAN	1	ES3 / L
27	2B	P7431 / T-2	100/15A	DRY PROVISION STORE EXH. FAN	1	ES3 / L
28	2B	P7441 / T-2	100/15A	PAINT STORE EXH. FAN	1	ES3 / L
29	2B	P7501 / T-2	100/15A	HOSPITAL EXH. FAN	1	ES3 / L
30	2B	P7511 / TA-2	100/15A	DECK STORE EXH. FAN (ST'BD)	1	ES4 / L

NO.	TYPE	FEEDER DESCRIPTION: FEED CIRCUIT NO. / CABLE TYPE	FEEDER DESCRIPTION: FRAME /RATING	FEEDER DESCRIPTION: FEEDER NAME	Q'TY	EM'CY & PREF. TRIP / CABLE ENTRANCE
31	2B	P7521 / TA-2	100/15A	DECK STORE EXH. FAN (PORT)	1	ES4 / L
32	2B	P7531 / T-2	100/100A [DISCON]	FOAM ROOM EXH. FAN	1	L
33	MB			NO.5 LOCAL GROUP STARTER PANEL	1	
34	2B	P7601 / T-2	100/15A	BOSUN STORE EXH. FAN	1	L
35	2B		100/15A	SPARE1	1	L
36	2B		100/15A	SPARE2	1	L
37	2B		100/20A	SPARE3	1	L
38	2B		100/30A	SPARE4	1	L
39	2B	P8101 / FT-35	100/100A [DISCON]	EM'CY FIRE PUMP	1	L
40	2B	P5509 / T-2	100/100A [DISCON]	E/R WORKSHOP WELDING AREA EXH. FAN	1	L

* NOTE
1. CABLE ENTRANCE
   - L : LOWER & SIDE, U : UPPER
2. LETTER MARKED WITH [ ] ARE NOT WRITTEN OF NAME PLATE.

0	1	2	3	4	5
6	7	8	9	10	11

PROJECT No.	S5130	TITLE	NAME PLATE LIST (LGSP)
HME		SHEET No.	NP2-2

RPB NAME PLATE

NO.	TYPE	NAME	CIRC. NO.	Q'TY	NO.	TYPE	NAME	CIRC. NO.	Q'TY
1	PA	EM'CY FIRE PUMP	P8105	1EA	21	PA	NO.2 M/E J.W PUMP	P2112,13 P2804	1EA
2	PA	M/E J.W PRE-HEATER CIRC. PUMP	P2122	1EA	22	PA	H.F.O TRANS. PUMP	P2416 P3206	1EA
3	PA	M/E AIR COOLER CLEANING PUMP	P2132	1EA	23	PA	M.G.O TRANS. PUMP		1EA
4	PA	M.G.O SHIFTING PUMP	P3223	1EA	24	PA	NO.1 AUX. BOILER FEED WATER PUMP	P2502,03 P3102	1EA
5	PA	S/G ROOM SUPPLY FAN	P4322	1EA	25	PA	NO.2 AUX. BOILER FEED WATER PUMP		1EA
6	PA	CO2 ROOM EXH. FAN	P4332	1EA	26	PA	NO.1 COMP. BOILER FEED WATER PUMP	P2512,13 P3112	1EA
7	PA	E/R WORKSHOP WELDING AREA EXH. FAN	P5510	1EA	27	PA	NO.2 COMP. BOILER FEED WATER PUMP		1EA
8	PA	HOT WATER CIRC. PUMP	P6712	1EA	28	PA	NO.1 DECK WATER SEAL PUMP	P2522,23 P3122	1EA
9	PA	PURIFIER ROOM EXH. FAN	P7102	1EA	29	PA	NO.2 DECK WATER SEAL PUMP		1EA
10	PA	L.O TRANS. PUMP	P7202	1EA	30	PA	NO.1 S/T L.O PUMP	P2602,03 P2722	1EA
11	PA	SLUDGE PUMP	P7213	1EA	31	PA	NO.2 S/T L.O PUMP		1EA
12	PA	SLUDGE PUMP [NEAR W.O. SETT. TANK]	P7217	1EA	32	PA	NO.1 MAIN AIR COMPRESSOR	P2404,05, P2406, P3003	1EA
13	PA	SANITARY SPACE EXH. FAN	P7422	1EA	33	PA	NO.2 MAIN AIR COMPRESSOR		1EA
14	PA	DRY PROVISION STORE EXH. FAN	P7432	1EA	34	PA	NO.1 F.W HYD. PUMP	P6802	1EA
15	PA	BOSUN STORE EXH. FAN	P7602	1EA	35	PA	NO.2 F.W HYD. PUMP		1EA
16	PA	NO.1 MAIN L.O PUMP	P2002,03 P2703	1EA	36	PA	NO.1 D.W HYD. PUMP	P6812	1EA
17	PA	NO.2 MAIN L.O PUMP		1EA	37	PA	NO.2 D.W HYD. PUMP		1EA
18	PA	NO.1 L.T C.F.W PUMP	P2102,03 P2802	1EA	38	PA	NO.1 H.F.O PURIFIER SUPPLY PUMP	P6922 P7022	1EA
19	PA	NO.2 L.T C.F.W PUMP		1EA	39	PA	NO.2 H.F.O PURIFIER SUPPLY PUMP		1EA
20	PA	NO.1 M/E J.W PUMP	P2112,13 P2804	1EA	40	PA	NO.1 L.O PURIFIER SUPPLY PUMP	P6932 P7032	1EA

NOTE: LETTER MARKED WITH [ ] ARE NOT WRITTEN OF NAME PLATE.

PROJECT No.	S5130	TITLE	NAME PLATE MODEL LIST (RPB)
	HME	SHEET No.	NP3

0	1	2	3	4	5
6	7	8	9	10	11

RPB NAME PLATE

NO.	TYPE	NAME	CIRC. NO.	Q'TY	NO.	TYPE	NAME	CIRC. NO.	Q'TY
41	PA	NO.2 L.O PURIFIER SUPPLY PUMP	P6932 P7032	1EA	61				
42	PA	GALLEY EXH. FAN	P7402	1EA	62				
43	PA	GALLEY SUPPLY FAN		1EA	63				
44	PA	DECK STORE EXH. FAN (ST'BD)	P7512	1EA	64				
45	PA	DECK STORE EXH. FAN (PORT)		1EA	65				
46	PA	NO.1 FIRE, BILGE & G/S PUMP	P2303,04 P2813,14	1EA	66				
47	PA	NO.2 FIRE, BILGE & G/S PUMP		1EA	67				
48	PA	SCRUBBER C.S.W PUMP		1EA	68				
49	PA	NO.1 E/R SUPPLY FAN	P2212 P2913	1EA	69				
50	PA	NO.2 E/R SUPPLY/EXH. FAN		1EA	70				
51	PA	NO.3 E/R SUPPLY/EXH. FAN		1EA	71				
52	PA	NO.4 E/R SUPPLY FAN		1EA	72				
53	–	PAINT STORE EXH. FAN	P7442	–	73				
54	PA	NO.1 FIRE, BILGE & G/S PUMP	FCS	1EA	74				
55	PA	NO.2 FIRE, BILGE & G/S PUMP		1EA	75				
56	PA	EM'CY FIRE PUMP		1EA	76				
57	PA	NO.1 MAIN C.S.W PUMP	P9905 P9906	1EA	77				
58	PA	NO.2 MAIN C.S.W PUMP		1EA	78				
59	PA	EM'CY STOP FOR F.O SUPPLY UNIT	P10001	1EA	79				
60	PA	EM'CY STOP FOR SEWAGE TREATMENT CONTROL PANEL	P5115	1EA	80				

NOTE: LETTER MARKED WITH [ ] ARE NOT WRITTEN OF NAME PLATE.

PROJECT No.	S5130	TITLE	NAME PLATE MODEL LIST (RPB)		
	HME	SHEET No.	NP4		

ENP-1 (1EA)

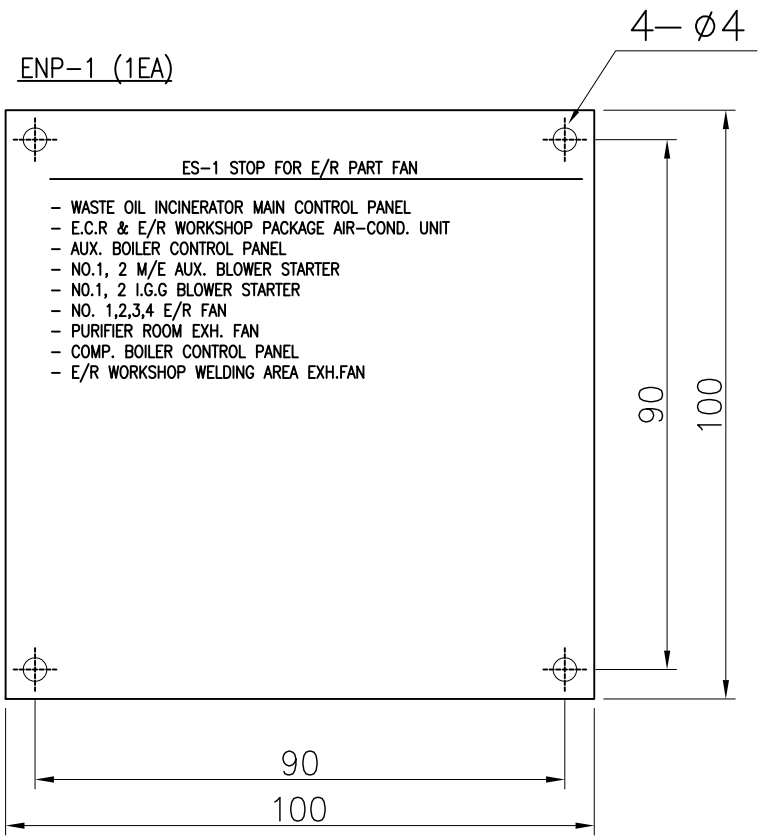

Q'TY : 1EA/SHIP

ENP-2 (1EA)

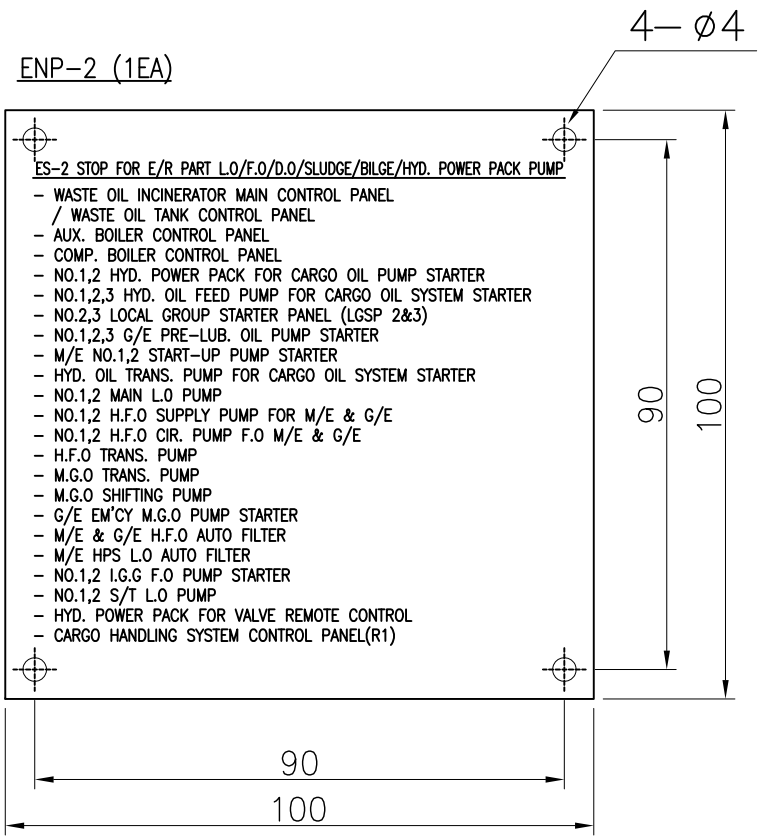

Q'TY : 1EA/SHIP

** NOTES **

1. MATERIAL : PHENOLIC 2t
2. LETTER : WHITE
3. GROUND : RED

0	1	2	3	4	5						
6	7	8	9	10	11						

PROJECT No.	S5130	TITLE	EM'CY STOP NAME PLATE
HME		SHEET No.	NP5

ENP-3 (1EA)

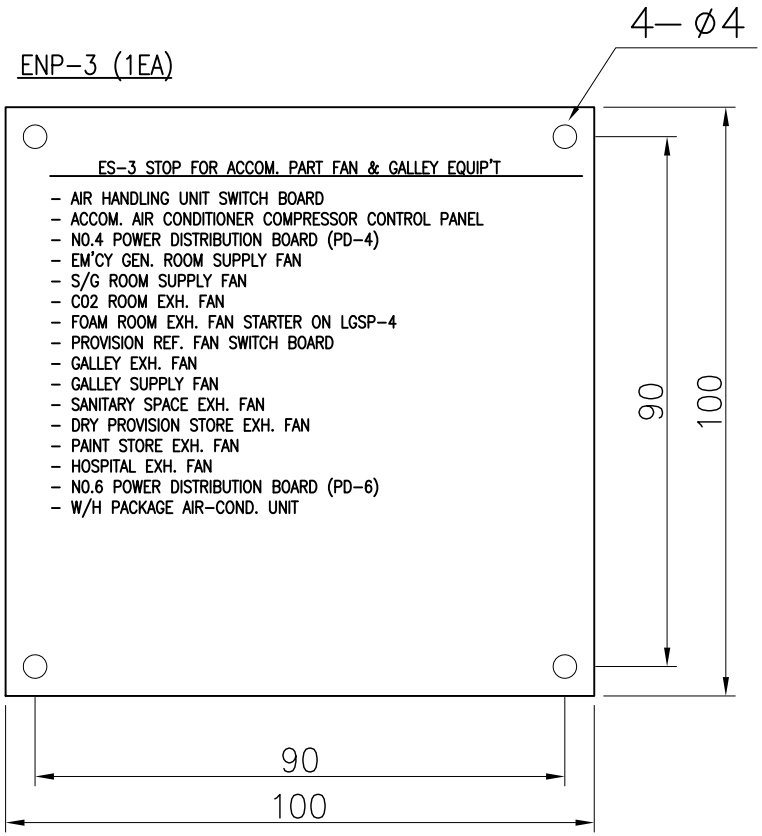

Q'TY : 1EA/SHIP

ENP-4 (1EA)

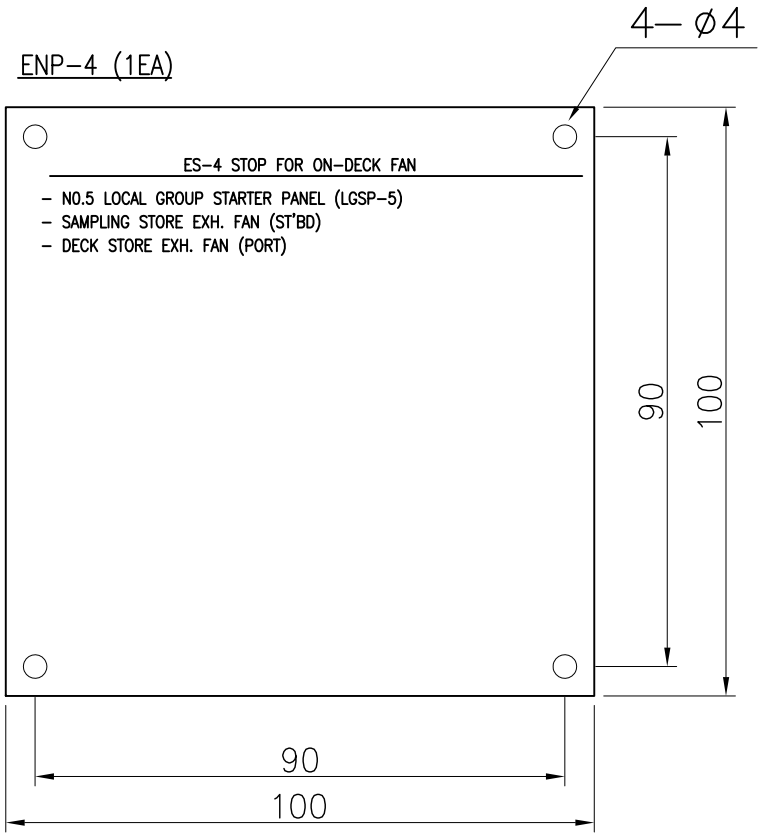

Q'TY : 1EA/SHIP

** NOTES **

1. MATERIAL : PHENOLIC 2t
2. LETTER : WHITE
3. GROUND : RED

PROJECT No.	S5130	TITLE	EM'CY STOP NAME PLATE
HME		SHEET No.	NP6

ENP-1S (1EA)

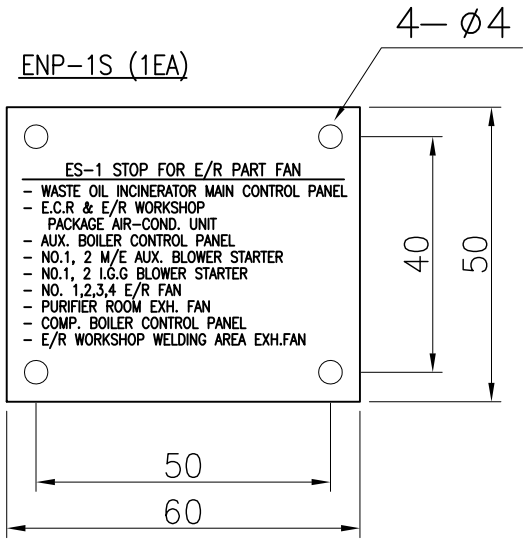

Q'TY : 1EA/SHIP

ENP-2S (1EA)

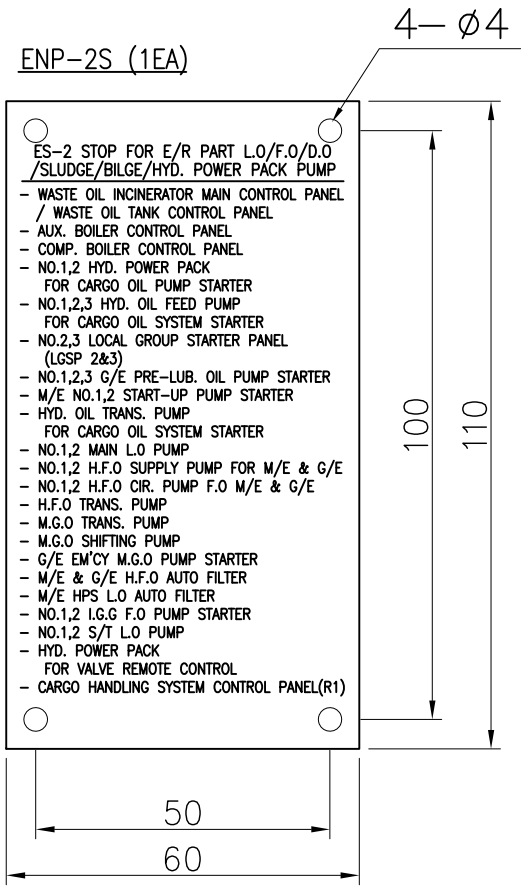

Q'TY : 1EA/SHIP

ENP-5S (1EA)

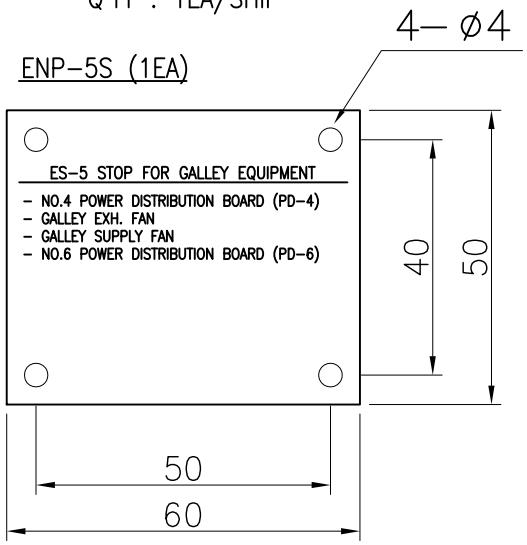

Q'TY : 1EA/SHIP

** NOTES **

1. MATERIAL : PHENOLIC 2t
2. LETTER : WHITE
3. GROUND : RED

PROJECT No. S5130		TITLE	EM'CY STOP NAME PLATE
HME		SHEET No.	NP7

OTHERS NAME PLATE

SECTION	DESIGN	DEMENSION				COLOR		MATERIAL	REMARK
		H	L	D	T	LETTER	GROUND		
FCS NAME PLATE	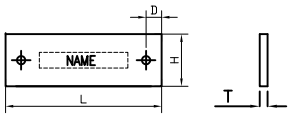	20	150	5	2	☐ BLACK ☒ WHITE	☒ BLACK ☐ WHITE	☒ PHENOLIC ☐ SUS304 ☐ ALUMINUM	
		NAME			Q'TY				
		EMERGENCY STOP SWITCH BOX			1EA				

SECTION	DESIGN	DEMENSION				COLOR		MATERIAL	REMARK
		H	L	D	T	LETTER	GROUND		
RPB NAME PLATE	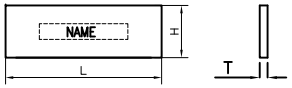	15	49	-	2	☐ BLACK ☒ WHITE	☐ BLACK ☐ WHITE ☒ RED	☒ PHENOLIC ☐ SUS304 ☐ ALUMINUM	
		NAME			Q'TY				
		PAINT STORE EXH. FAN			1EA				
		EM'CY STOP BOX			2EA				

SECTION	DESIGN	NAME	Q'TY	COLOR		MATERIAL	REMARK
				LETTER	GROUND		
EPB NAME PLATE	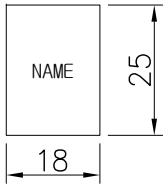	SEWAGE TREATMENT CONTROL PANEL	2EA	☐ BLACK ☒ WHITE	☐ BLACK ☐ WHITE ☒ RED	☐ PHENOLIC ☐ SUS304 ☐ ALUMINUM ☒ PC	
		SLUDGE PUMP	2EA				
		OILY WATER SEPARATOR CONTROL PANEL	2EA				

PROJECT No.	S5130	TITLE	OTHERS NAME PLATE
	HME	SHEET No.	NP8

NAME PLATE MODEL LIST

SECTION	DESIGN	TYPE	DEMENSION				COLOR		MATERIAL	REMARK
			H	L	D	T	LETTER	GROUND		
PARTS WITH SPEC.	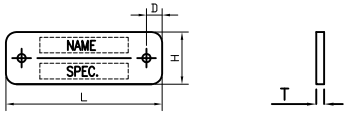	TYPE-SA	20	60	5	2	☐ BLACK	■ BLACK	■ PHENOLIC	NOT USED
		TYPE-SB	25	100	5	2	■ WHITE	☐ WHITE	☐ SUS304	
									☐ ALUMINUM	
INDICATION LAMP & PUSH BUTTON	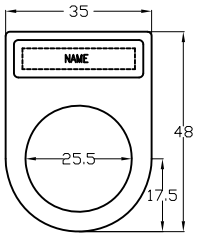	TYPE-CS1					☐ BLACK ■ WHITE	■ BLACK ☐ WHITE	■ PHENOLIC ☐ SUS304 ☐ ALUMINUM	
2 POSITION SELECT SWITCH	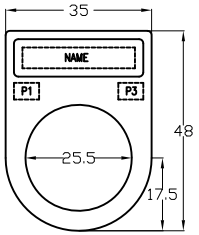	TYPE-CS2					☐ BLACK ■ WHITE	■ BLACK ☐ WHITE	■ PHENOLIC ☐ SUS304 ☐ ALUMINUM	
3 POSITION SELECT SWITCH	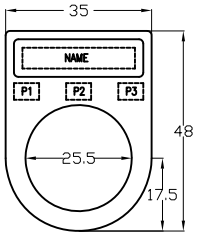	TYPE-CS3					☐ BLACK ■ WHITE	■ BLACK ☐ WHITE	■ PHENOLIC ☐ SUS304 ☐ ALUMINUM	

PROJECT No.	S5130	TITLE	CONTROL SWITCH OF NAME PLATE
	HME	SHEET No.	NP09

0	1	2	3	4	5
6	7	8	9	10	11

SYMBOL		LGSP NAME DESCRIPTION			Q'TY	REMARK
NO	TYPE	NAME				
		P1	P2	P3		
01	CS1	SOURCE			27	
02		RUN			27	
03		START			27	
04		STOP			27	
05		SPACE HEATER RUN			6	
06	CS3	SPACE HEATER			6	
		OFF	–	ON		
07					5	
		MANU.		AUTO		
08						
09						
10						

SYMBOL		RPB & EM'CY STOP NAME DESCRIPTION			Q'TY	REMARK
NO	TYPE	NAME				
		P1	P2	P3		
01	CS1	START/RUN			52	
02		START			3	
03		RUN			3	
04		STOP			57	
05		SUP. START/RUN			2	
06		EXH. START/RUN			2	
07						
08						
09						
10						

PROJECT No.	S5130	TITLE	CONTROL SWITCH OF NAME PLATE
	HME	SHEET No.	NP10

0	1	2	3	4	5
6	7	8	9	10	11

COLOR TIE LIST

SECTION	DESCRIPTION & DIMENSION	TYPE	Q'T	NAME	COLOR		MATERIAL	REMARK
					LETTER	GROUND		
COLOR TIE	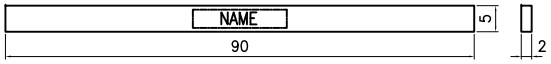	TYPE-CT	1	ES1	WHITE	RED	PHENOLIC	ES1:P7101 ES3:P7401,7411, P7421,P7431, P7441,P7501 ES4:P7511,P7521 ES5:P7401,7411 CT1:P7101 CT2:P7101
			6	ES3	WHITE	RED		
			2	ES4	WHITE	RED		
			2	ES5	WHITE	RED		
			1	CT1	BLACK	YELLOW		
			1	CT2	BLACK	YELLOW		
				PT1	WHITE	BLACK		
				D.F.F	WHITE	RED		

EM'CT RPB NAME PLATE

SECTION	DESCRIPTION & DIMENSION	TYPE	Q'T	NAME	COLOR		MATERIAL	REMARK
					LETTER	GROUND		
INTERNAL CIRCUIT	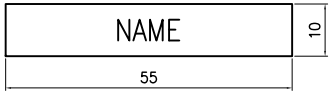	TYPE-ES	2	ES1	WHITE	RED	PHENOLIC	
			2	ES2	WHITE	RED		
			1	ES3	WHITE	RED		
			1	ES4	WHITE	RED		
			1	ES5	WHITE	RED		

PROJECT No. S5130		TITLE	COLOR TIE LIST & EM'CY RPB OF NAME PLATE
HME		SHEET No.	NP11

0	1	2	3	4	5
6	7	8	9	10	11

NAME PLATE MODEL LIST

SECTION	DESIGN	TYPE	COLOR		MATERIAL	REMARK	Q'TY
			LETTER	GROUND			
SEQUENTIAL START TIME	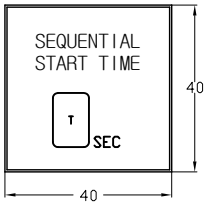	TYPE-ST	■ BLACK □ WHITE	□ BLACK ■ YELLOW	■ PHENOLIC □ SUS304 □ ALUMINIUM	0 Sec.	-
						5 Sec.	1
						10 Sec.	-
						15 Sec.	-
						20 Sec.	-

ADDED PAGE

0	1	2	3	4	5
6	7	8	9	10	11

PROJECT No.	S5130	TITLE	NAME PLATE MODEL LIST (FREE-STYLE)
	HME	SHEET No.	NP12

NP TYPE	Q'TY	CIR No.	CIRCUIT NAME	MOTOR RATINGS AC440V 60HZ KW	MOTOR RATINGS AC440V 60HZ A	MEANS MCCB TYPE FRAME/ CURRENT (A)	MEANS CONNECTION	MEANS ACCESSORY	CABLE LINE CIR No. DESCRIPTION	CABLE LOAD DESCRIP-TION	CONTROL START METHOD	CONTROL CONTROL METHOD	CONTROL U V FEATURE SEQENTIAL START DELAY TIME (SEC)	CONTROL REMOTE CONTROL	CONTROL EM'CY STOP PREF TRIP	CONTROL SPACE HEATER (ELEMENT:EH) (WINDING:WH)	INSTRUMENTS & OTHER AMMETER TYPE S7-AA	INSTRUMENTS & OTHER AMMETER CT KBJ-03 (5VA)	INSTRUMENTS & OTHER RUNNING HOUR METER TYPE H57 (AC220V)	INSTRUMENTS & OTHER AUTO TRANS-FORMER	INSTRUMENTS & OTHER INSULATION MONITOR (SBAG-202)	REF. DRAWINGS OUTLINE (PAGE) SCHEMATIC DIAGRAM (PAGE)
MB	1		NO.1 LOCAL GROUP STARTER PANEL																			
2B	1	P6701	NO.1 F.W HYD. PUMP	3.7	6.47	UAB103R 100/15A	FDC		P1401 T-10	T-2	DOL	ASS	UVP	M/S			0-10A		○			SD101
2B	1	P6711	HOT WATER CIRC. PUMP	0.4	0.97	UAB103R 100/15A	FDC		—	T-2	DOL	NA	UVP	M/S			0-2A		○			SD102
2B	1	P6721	F.W PUMP FOR W/H PACKAGE AIR CON.	1.5	2.81	UAB103R 100/15A	FDC		—	T-2	DOL	NA	UVP				0-5A		○			SD103
2B	1	P6731	NO.1 D.W HYD. PUMP	3.7	6.47	UAB103R 100/15A	FDC		—	T-2	DOL	ASS	UVP	M/S			0-10A		○			SD104
2B	1	P6801	NO.2 F.W HYD. PUMP	3.7	6.47	UAB103R 100/15A	FDC		P1703 T-25	T-2	DOL	ASS	UVP	M/S			0-10A		○			SD105
2B	1	P6821	HOT WATER CALORIFIER			UAB103R 100/30A	PC		—	T-10		MCCB ONLY										SD106
2B	1	P6811	NO.2 D.W HYD. PUMP	3.7	6.47	UAB103R 100/15A	FDC		—	T-2	DOL	ASS	UVP	M/S			0-10A		○			SD107
MB	1		NO.2 LOCAL GROUP STARTER PANEL																			
2B	1	P6901	NO.1 H.F.O PURIFIER	4.6	8.1	UAB103R 100/15A	FDC		P1402 T-16	T-2	DOL	NA	UVP	EM'CY			0-15A		○			SD201
2B	1	P6921	NO.1 H.F.O PURIFIER SUPPLY PUMP	1.28	2.4	UAB103R 100/15A	FDC		—	T-2	DOL	NA	UVP	M/S			0-5A		○			SD202
2B	1	P6911	NO.1 L.O PURIFIER	4.6	8.1	UAB103R 100/15A	FDC		—	T-2	DOL	NA	UVP	EM'CY			0-15A		○			SD203
2B	1	P6931	NO.1 L.O PURIFIER SUPPLY PUMP	1.28	2.4	UAB103R 100/15A	FDC		—	T-2	DOL	NA	UVP	M/S			0-5A		○			SD204
2B	1	P7001	NO.2 H.F.O PURIFIER	4.6	8.1	UAB103R 100/15A	FDC		P1704 T-16	T-2	DOL	NA	UVP	EM'CY			0-15A		○			SD205
2B	1	P7021	NO.2 H.F.O PURIFIER SUPPLY PUMP	1.28	2.4	UAB103R 100/15A	FDC		—	T-2	DOL	NA	UVP	M/S			0-5A		○			SD206
2B	1	P7011	NO.2 L.O PURIFIER	4.6	8.1	UAB103R 100/15A	FDC		—	T-2	DOL	NA	UVP	EM'CY			0-15A		○			SD207
2B	1	P7031	NO.2 L.O PURIFIER SUPPLY PUMP	1.28	2.4	UAB103R 100/15A	FDC		—	T-2	DOL	NA	UVP	M/S			0-5A		○			SD208
2B	1	P7101	PURIFIER ROOM EXH. FAN	2.2	4.6	UAB103R 100/15A	FDC		—	T-2	DOL	NA	UVP	M/S ECC	CT1+ES1 +ES2	WH:AC37V,39VA(75VA)	0-7.5A		○			SD209

1. START METHOD
   - DOL : DIRECT ON LINE
   - Y/D : STAR DELTA
   - ATR : AUTO TRANSFORMER

2. CONTROL METHOD
   - NA : NON AUTO
   - ASS : AUTO START/STOP
   - AST : AUTO START
   - ASP : AUTO STOP
   - AC-V/P : AUTO CH-VR(NV,PRESS)
   - REV. : REVERSE

3. U V FEATURE
   - UVP : UNDER VOLTAGE PROTECTION
   - UVR : UNDER VOLTAGE RELEASE

4. EM'CY STOP
   - ES1 : EM'CY STOP GROUP 1
   - ES2 : EM'CY STOP GROUP 2
   - ES3 : EM'CY STOP GROUP 3
   - ES4 : EM'CY STOP GROUP 4
   - ES5 : EM'CY STOP GROUP 5
   - CT : EM'CY STOP BY CO_2

5. PREF. TRIP
   - PT1 : 1ST PREF. TRIP
   - PT2 : 2ND PREF. TRIP

6. REMOTE CONTROL
   1. M/S : MACH.SIDE
   2. E.C.C : ENG. CONTROL CONSOLE
   3. B.C.C : BRIDGE CONTROL CONSOLE
   4. C.C.C : CARGO CONTROL CONSOLE
   5. FCS : FIRE CONTROL STATION
   6. AMS : ALARM MONITORING SYS.
   7. STOP : REMOTE STOP ONLY
   8. BA.C.C : BALLAST CONTROL CONSOLE
   9. EM'CY : EM'CY STOP RPB
   10. OTHER

7. SPACE HEATER
   - EH : ELEMENT HEATING
   - WH : WINDING HEATING

PROJECT No.	S5130	TITLE	LEGEND OF DRAWINGS
	HME	SHEET No.	SP1

0	1	2	3	4	5
6	7	8	9	10	11

NP TYPE	Q'TY	CIR No.	CIRCUIT NAME	MOTOR RATINGS AC440V 60HZ KW	MOTOR RATINGS AC440V 60HZ A	MEANS MCCB TYPE FRAME/ CURRENT (A)	MEANS CONNECTION	MEANS ACCESSORY	CABLE LINE CIR No. DESCRIPTION	CABLE LOAD DESCRIP-TION	CONTROL START METHOD	CONTROL CONTROL METHOD	CONTROL U V FEATURE SEQENTIAL START DELAY TIME (SEC)	CONTROL REMOTE CONTROL	CONTROL EM'CY STOP PREF TRIP	CONTROL SPACE HEATER (ELEMENT:EH) (WINDING:WH)	INSTRUMENTS & OTHER AMMETER TYPE S7-AA	INSTRUMENTS & OTHER AMMETER CT KBJ-03 (5VA)	INSTRUMENTS & OTHER RUNNING HOUR METER TYPE H57 (AC220V)	INSTRUMENTS & OTHER AUTO TRANS-FORMER	INSTRUMENTS & OTHER INSULATION MONITOR (SBAG-202)	REF. DRAWINGS OUTLINE (PAGE) SCHEMATIC DIAGRAM (PAGE)
MB	1		NO.3 LOCAL GROUP STARTER PANEL																			
2B	1	P7201	L.O TRANS. PUMP	2.5	4.7	UAB103R 100/15A	FDC		P1705 T-10	T-2	DOL	NA	UVP	M/S			0-7.5A		○			SD301
2B	1	P7211	SLUDGE PUMP	2.55	5.2	UAB103R 100/15A	FDC		—	T-2	DOL	NA	UVP	M/Sx2 ECC EM'CYx2			0-7.5A		○			SD302
2B	1	P7301	OILY WATER SEPARATOR CONTROL PANEL	1.3	3.2	UAB103R 100/15A	FDC		—	T-2		MCCB ONLY		WCC								SD303
MB	1		NO.4 LOCAL GROUP STARTER PANEL																			
2B	1	P7401	GALLEY EXH. FAN	0.75	1.9	UAB103R 100/15A	FDC		P1403 T-10	T-2	DOL	NA	UVP	M/S	ES3+ES5		0-3A					SD401
2B	1	P7411	GALLEY SUPPLY FAN	0.4	1.0	UAB103R 100/15A	FDC		—	T-2	DOL	NA	UVP	M/S	ES3+ES5		0-2A					SD402
2B	1	P7421	SANITARY SPACE EXH. FAN	2.2	4.6	UAB103R 100/15A	FDC		—	T-2	DOL	NA	UVP	M/S	ES3		0-7.5A		○			SD403
2B	1	P7431	DRY PROVISION STORE EXH. FAN	0.16	0.8	UAB103R 100/15A	FDC		—	T-2	DOL	NA	UVP	M/S	ES3		0-2A					SD404
2B	1	P7441	PAINT STORE EXH. FAN	0.4	1.2	UAB103R 100/15A	FDC		—	T-2	DOL	NA	UVP	M/S	ES3	WH:AC40V,21VA(75VA)	0-2A					SD405
2B	1	P7501	HOSPITAL EXH. FAN	0.16	0.8	UAB103R 100/15A	FDC		—	T-2		MCCB ONLY			ES3							SD406
2B	1	P7511	DECK STORE EXH. FAN (ST'BD)	0.4	1.2	UAB103R 100/15A	FDC		—	TA-2	DOL	NA	UVP	M/S	ES4	WH:AC40V,21VA(75VA)	0-2A					SD407
2B	1	P7521	DECK STORE EXH. FAN (PORT)	0.4	1.2	UAB103R 100/15A	FDC		—	TA-2	DOL	NA	UVP	M/S	ES4	WH:AC40V,21VA(75VA)	0-2A					SD407
2B	1	P7531	FOAM ROOM EXH. FAN	0.16	0.8	UAD103R 100/100A	PC		P4606 T-2	T-2		MCCB ONLY										SD408

1. START METHOD
   - DOL : DIRECT ON LINE
   - Y/D : STAR DELTA
   - ATR : AUTO TRANSFORMER

2. CONTROL METHOD
   - NA : NON AUTO
   - ASS : AUTO START/STOP
   - AST : AUTO START
   - ASP : AUTO STOP
   - AC-V/P : AUTO CH-VR(NV,PRESS)
   - REV. : REVERSE

3. U V FEATURE
   - UVP : UNDER VOLTAGE PROTECTION
   - UVR : UNDER VOLTAGE RELEASE

4. EM'CY STOP
   - ES1 : EM'CY STOP GROUP 1
   - ES2 : EM'CY STOP GROUP 2
   - ES3 : EM'CY STOP GROUP 3
   - ES4 : EM'CY STOP GROUP 4
   - ES5 : EM'CY STOP GROUP 5
   - CT : EM'CY STOP BY CO2

5. PREF. TRIP
   - PT1 : 1ST PREF. TRIP
   - PT2 : 2ND PREF. TRIP

6. REMOTE CONTROL
   1. M/S : MACH.SIDE
   2. E.C.C : ENG. CONTROL CONSOLE
   3. B.C.C : BRIDGE CONTROL CONSOLE
   4. C.C.C : CARGO CONTROL CONSOLE
   5. FCS : FIRE CONTROL STATION
   6. AMS : ALARM MONITORING SYS.
   7. STOP : REMOTE STOP ONLY
   8. BA.C.C : BALLAST CONTROL CONSOLE
   9. OTHER

7. SPACE HEATER
   - EH : ELEMENT HEATING
   - WH : WINDING HEATING

0	1	2	3	4	5						
6	7	8	9	10	11						

PROJECT No.	S5130	TITLE	LEGEND OF DRAWINGS
HME		SHEET No.	SP2

NP TYPE	Q'TY	CIR No.	CIRCUIT NAME	MOTOR RATINGS AC440V 60HZ KW	MOTOR RATINGS AC440V 60HZ A	MEANS MCCB TYPE FRAME/ CURRENT (A)	MEANS CONNECTION	MEANS ACCESSORY	CABLE LINE CIR No. DESCRIPTION	CABLE LOAD DESCRIP-TION	CONTROL START METHOD	CONTROL CONTROL METHOD	CONTROL U V FEATURE SEQENTIAL START DELAY TIME (SEC)	CONTROL REMOTE CONTROL	CONTROL EM'CY STOP PREF TRIP	CONTROL SPACE HEATER (ELEMENT:EH) (WINDING:WH)	INSTRUMENTS & OTHER AMMETER TYPE S7-AA	INSTRUMENTS & OTHER AMMETER CT KBJ-03 (5VA)	INSTRUMENTS & OTHER RUNNING HOUR METER TYPE H57 (AC220V)	INSTRUMENTS & OTHER AUTO TRANS-FORMER	INSTRUMENTS & OTHER INSULATION MONITOR (SBAG-202)	REF. DRAWINGS OUTLINE (PAGE) SCHEMATIC DIAGRAM (PAGE)
MB	1		NO.5 LOCAL GROUP STARTER PANEL																			
2B	1	P7601	BOSUN STORE EXH. FAN	0.75	1.9	UAB103R 100/15A	FDC		P1707 TA-35	T-2	DOL	NA	UVP	M/S		WH:AC40V,21VA(75VA)	0-3A					SD501
2B	1		SPARE1			UAB103R 100/15A	PC					MCCB ONLY										SD502
2B	1		SPARE2			UAB103R 100/15A	PC					MCCB ONLY										SD502
2B	1		SPARE3			UAB103R 100/20A	PC					MCCB ONLY										SD502
2B	1		SPARE4			UAB103R 100/30A	PC					MCCB ONLY										SD502
			INDIVIDUAL STARTER																			
2B	1	P8101	EM'CY FIRE PUMP	45	73.7	UAD103R 100/100A	FDC		P4007 FT-35	FT-35	ATR	NA	UVR (5 SEC)	M/S WCC,FCS		WH:AC22V,572VA (700VA)	0-100A	100/5A	○	ATO-345		SDI01
2B	1	P5509	E/R WORKSHOP WELDING AREA EXH. FAN	0.4	1.0	UAD103R 100/100A	FDC		P5508 T-2	T-2	DOL	NA	UVP	M/S								SDI02

1. START METHOD
   - DOL : DIRECT ON LINE
   - Y/D : STAR DELTA
   - ATR : AUTO TRANSFORMER
2. CONTROL METHOD
   - NA : NON AUTO
   - ASS : AUTO START/STOP
   - AST : AUTO START
   - ASP : AUTO STOP
   - AC-V/P : AUTO CH-VR(NV,PRESS)
   - REV. : REVERSE
3. U V FEATURE
   - UVP : UNDER VOLTAGE PROTECTION
   - UVR : UNDER VOLTAGE RELEASE
4. EM'CY STOP
   - ES1 : EM'CY STOP GROUP 1
   - ES2 : EM'CY STOP GROUP 2
   - ES3 : EM'CY STOP GROUP 3
   - ES4 : EM'CY STOP GROUP 4
   - ES5 : EM'CY STOP GROUP 5
   - CT : EM'CY STOP BY CO2
5. PREF. TRIP
   - PT1 : 1ST PREF. TRIP
   - PT2 : 2ND PREF. TRIP
6. REMOTE CONTROL
   1. M/S : MACH.SIDE
   2. E.C.C : ENG. CONTROL CONSOLE
   3. B.C.C : BRIDGE CONTROL CONSOLE
   4. C.C.C : CARGO CONTROL CONSOLE
   5. FCS : FIRE CONTROL STATION
   6. AMS : ALARM MONITORING SYS.
   7. STOP : REMOTE STOP ONLY
   8. BA.C.C : BALLAST CONTROL CONSOLE
   9. OTHER
7. SPACE HEATER
   - EH : ELEMENT HEATING
   - WH : WINDING HEATING

0	1	2	3	4	5						
6	7	8	9	10	11						

PROJECT No.	S5130	TITLE	LEGEND OF DRAWINGS
HME		SHEET No.	SP3

MANUFACTURER			HYUNDAI													HYOMYUNG	OBOK				SB-FUSE						YONG SUNG																HYUNDAI			KACON	OMRON		LUXCO	HYUNDAI		
			MAGNETIC CONTACTOR											THERMAL OVERCURRENT RELAY (3P)		STARTER MODULE	CONTROL POWER TRANSFORMER (ø1)				FUSE						INDICATING LAMP			ILLUMINATED PUSH BUTTON SWITCH			PUSH BUTTON SWITCH			CONTROL SWITCH						AUX RELAY				TIMING RELAY			AUX. BLOCK		
			AC220V				AC440V														TYPE SB-C1																															
			UMC 9	UMC 12	UMC 18	UMC 25	UMC 22	UMC 32	UMC 40	UMC 50	UMC 80	UMC 90	UMC 130	TYPE	RANGE	HMC-	440/35V FRC-300	440/48V FRC-3000	440/220V/22V FRC-200	440/220V/22V FRC-55	FC 1 3A	FC 2 1A	FC 3 3A	FH 1 3A	FH 2 3A	FL 1A	YSPL2-024AWW	YSPL2-024ANW	YSPL2-024AGW	YSNPBL2-AL24G	YSNPBL2-AL22G	YSNPBL2-AL11G		YSAP12-11R	YSAP12-11G	YSAP12-22B	YSAR2-222KB	YSAR2-211LB	YSAR2-222LB		YSC3308-84M0B	YSC3505-84M0B	UMX22 AC 220V	UMX31 AC 220V	UMX40 AC 220V	HR705-4PL AC 220V	H3BA-N AC 220V	H3CRH8L AC 220V	GTN-YD AC 440V	UAB 31(3a+1b)	UAC 31(3a+1b)	
CIR No.	CIRCUIT NAME	RATING(A) (SETTING)																																																		
	NO.1 LOCAL GROUP STARTER PANEL																																																			
P6701	NO.1 F.W HYD. PUMP	6.47	1											UTH12	5.6-8	NON				1	2	2				1	1		1					1	1		1													1		
P6711	HOT WATER CIRC. PUMP	0.97	1											UTH12	0.8-1.2	NON				1	2	2				1	1		1					1	1														1		
P6721	F.W PUMP FOR W/H PACKAGE AIR CON.	2.81	1											UTH12	2-3	NON				1	2	2				1	1		1					1	1														1		
P6731	NO.1 D.W HYD. PUMP	6.47	1											UTH12	5.6-8	NON				1	2	2				1	1		1					1	1		1													1		
P6801	NO.2 F.W HYD. PUMP	6.47	1											UTH12	5.6-8	NON				1	2	2				1	1		1					1	1		1													1		
P6821	HOT WATER CALORIFIER																																																			
P6811	NO.2 D.W HYD. PUMP	6.47	1											UTH12	5.6-8	NON				1	2	2				1	1		1					1	1		1													1		
	NO.2 LOCAL GROUP STARTER PANEL																																																			
P6901	NO.1 H.F.O PURIFIER	8.1			2									UTH32	6-9	NON				*T1	2	2	2			1	1		1					1	1											3	1			2		
P6921	NO.1 H.F.O PURIFIER SUPPLY PUMP	2.4	1											UTH12	2-3	NON				1	2	2				1	1		1					1	1														1		
P6911	NO.1 L.O PURIFIER	8.1			2									UTH32	6-9	NON				*T1	2	2	2			1	1		1					1	1											3	1			2		
P6931	NO.1 L.O PURIFIER SUPPLY PUMP	2.4	1											UTH12	2-3	NON				1	2	2				1	1		1					1	1														1		
P7001	NO.2 H.F.O PURIFIER	8.1			2									UTH32	6-9	NON				*T1	2	2	2			1	1		1					1	1											3	1			2		
P7021	NO.2 H.F.O PURIFIER SUPPLY PUMP	2.4	1											UTH12	2-3	NON				1	2	2				1	1		1					1	1														1		
P7011	NO.2 L.O PURIFIER	8.1			2									UTH32	6-9	NON				*T1	2	2	2			1	1		1					1	1											3	1			2		
P7031	NO.2 L.O PURIFIER SUPPLY PUMP	2.4	1											UTH12	2-3	NON				1	2	2				1	1		1					1	1														1		
P7101	PURIFIER ROOM EXH. FAN	4.6	2											UTH12	4-6	NON			*H1	1	2	2		2		1	1	1	1					1	1		1									1	1			1	1

*T1 : FRC-350 440/220/22V
*H1 : FRC-75 440/37V

PROJECT No.	S5130	TITLE	LEGEND OF DRAWINGS
	HME	SHEET No.	PL1

0	1	2	3	4	5
6	7	8	9	10	11

MANUFACTURER			HYUNDAI														HYOMYUNG	OBOK				SB-FUSE						YONG SUNG															HYUNDAI			KACON	OMRON		LUXCO	HYUNDAI	
			MAGNETIC CONTACTOR											THERMAL OVERCURRENT RELAY (3P)		STARTER MODULE	CONTROL POWER TRANSFORMER (ø1)				FUSE						INDICATING LAMP			ILLUMINATED PUSH BUTTON SWITCH				PUSH BUTTON SWITCH			CONTROL SWITCH						AUX RELAY				TIMING RELAY			AUX BLOCK	
			AC220V				AC440V															TYPE SB-C1															ROTARY SWITCH				CAM SWITCH										
CIR No.	CIRCUIT NAME	RATING(A) (SETTING)	UMC 9	UMC 12	UMC 18	UMC 25	UMC 22	UMC 32	UMC 40	UMC 50	UMC 80	UMC 90	UMC 130	TYPE	RANGE	HMC-	440/35V FRC-300	440/48V FRC-3000	440/220V/22V FRC-200	440/220V/22V FRC-55	FC 1 3A	FC 2 1A	FC 3 3A	FH 1 3A	FH 2 3A	FL 1A	YSPL2-024ANW	YSPL2-024ANW	YSPL2-024AGW	YSNPBL2-AL24G	YSNPBL2-AL22G	YSNPBL2-AL11G		YSAP12-11R	YSAP12-11G	YSAP12-22B	YSAR2-222KB	YSAR2-211LB	YSAR2-222LB		YSC3308-84MOB	YSC3505-84MOB	UMX22 AC 220V	UMX31 AC 220V	UMX40 AC 220V	HR705-4PL AC 220V	H3BA-N AC 220V	H3CRH8L AC 220V	GTN-YD AC 440V	UAB 31(3a+1b)	UAC 31(3a+1b)
	NO.3 LOCAL GROUP STARTER PANEL																																																			
P7201	L.O TRANS. PUMP	4.7	1											UTH12	3-5	NON				1	2	2				1	1		1					1	1											1				1	
P7211	SLUDGE PUMP	5.2	1											UTH12	4-6	NON				*T4	2	2				1	1		1					1	1											1	1			1	
P7301	OILY WATER SEPARATOR CONTROL PANEL	3.2														NON					2	2																														
	NO.4 LOCAL GROUP STARTER PANEL																																																			
P7401	GALLEY EXH. FAN	1.9	1											UTH12	1.5-2.1	NON				1	2	2				1	1		1					1	1															1	
P7411	GALLEY SUPPLY FAN	1.0	1											UTH12	0.8-1.2	NON				1	2	2				1	1		1					1	1															1	
P7421	SANITARY SPACE EXH. FAN	4.6	1											UTH12	3-5	NON				1	2	2				1	1		1					1	1															1	
P7431	DRY PROVISION STORE EXH. FAN	0.8	1											UTH12	0.6-0.9	NON				*T2	*F1					1	1		1					1	1															1	
P7441	PAINT STORE EXH. FAN	1.2	2											UTH12	1.1-1.6	NON			*H4	1	2	2		2		1	1	1	1					1	1		1									1	1			1	1
P7501	HOSPITAL EXH. FAN	0.8	1													NON				*T5																																
P7511	DECK STORE EXH. FAN (ST'BD)	1.2	2											UTH12	1.1-1.6	NON			*H4	1	2	2		2		1	1	1	1					1	1		1									1	1			1	1
P7521	DECK STORE EXH. FAN (PORT)	1.2	2											UTH12	1.1-1.6	NON			*H4	1	2	2		2		1	1	1	1					1	1		1									1	1			1	1
P7531	FOAM ROOM EXH. FAN	0.8	1													NON																																				

*F1 : SB-C1,1A x2

*T2 : RC-300 440/220/22V
*T3 : RC-50 220/22V
*T4 : FRC-100 440/220V/22V
*T5 : RC-200 440/220V/22V
*H3 : FRC-75 440/75V
*H4 : FRC-75 440/40V

PROJECT No.	S5130	TITLE	LEGEND OF DRAWINGS
	HME	SHEET No.	PL2

0	1	2	3	4	5
6	7	8	9	10	11

MANUFACTURER			HYUNDAI													HYOMYUNG	OBOK				SB-FUSE						YONG SUNG															HYUNDAI			KACON	OMRON		LUXCO	HYUNDAI	
			MAGNETIC CONTACTOR											THERMAL OVERCURRENT RELAY (3P)		STARTER MODULE	CONTROL POWER TRANSFORMER (ø1)				FUSE						INDICATING LAMP			ILLUMINATED PUSH BUTTON SWITCH				PUSH BUTTON SWITCH			CONTROL SWITCH						AUX RELAY				TIMING RELAY			AUX BLOCK	
			AC220V				AC440V														TYPE SB-C1															ROTARY SWITCH				CAM SWITCH										
CIR No.	CIRCUIT NAME	RATING(A) (SETTING)	UMC 9	UMC 12	UMC 18	UMC 25	UMC 22	UMC 32	UMC 40	UMC 50	UMC 80	UMC 90	UMC 130	TYPE	RANGE	HMC-	440/35V FRC-300	440/48V FRC-3000	440/220V/22V FRC-200	440/220V/22V FRC-55	FC 1 3A	FC 2 1A	FC 3 3A	FH 1 3A	FH 2 3A	FL 1A	YSPL2-024AWW	YSPL2-024ANW	YSPL2-024AGW	YSNPBL2-AL24G	YSNPBL2-AL22G	YSNPBL2-AL11G		YSAP12-11R	YSAP12-11G	YSAP12-22B	YSAR2-222KB	YSAR2-211LB	YSAR2-222LB		YSC3308-84MOB	YSC3505-84MOB	UMX22 AC 220V	UMX31 AC 220V	UMX40 AC 220V	HR705-4PL AC 220V	H3BA-N AC 220V	H3CRH8L AC 220V	GTN-YD AC 440V	UAB 31(3a+1b)	UAC 31(3a+1b)
	NO.5 LOCAL GROUP STARTER PANEL																																																		
P7601	BOSUN STORE EXH. FAN	1.9	2											UTH12	1.5-2.1	NON			*H5	1	2	2		2		1	1	1	1					1	1		1									1	1			1	1
	SPARE1															NON																																				
	SPARE2															NON																																				
	SPARE3															NON																																				
	SPARE4															NON																																				
	INDIVIDUAL STARTER																																																			
P8101	EM'CY FIRE PUMP	73.7						1	1		1	1		UTH100	59-85	NON			*H6	*T4	2		2	2		1	1	1	1					1	1		1						3	1	1	*R1	2		2	1	1
P5509	E/R WORKSHOP WELDING AREA EXH. FAN	0.1	1											UTH12	0.8-1.2	NON				1	2	2				1	1		1					1	1											1				1	

*T4 : RC-200 440/220/22V
*H5 : FRC-75 440/40V
*H6 : FRC-700 440/22V

*R1 : LACH RELAY (SH-4/V, AC220V, FUJI)

PROJECT No.	S5130	TITLE	LEGEND OF DRAWINGS
	HME	SHEET No.	PL3

0	1	2	3	4	5
6	7	8	9	10	11

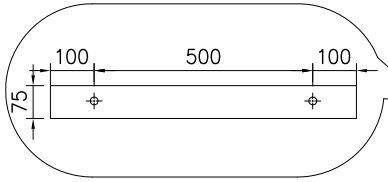

RUBBER PAD DETAIL

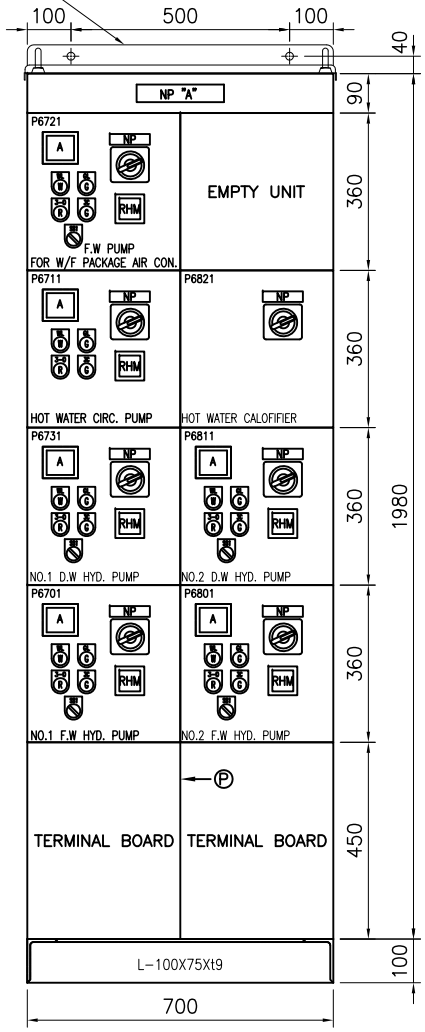

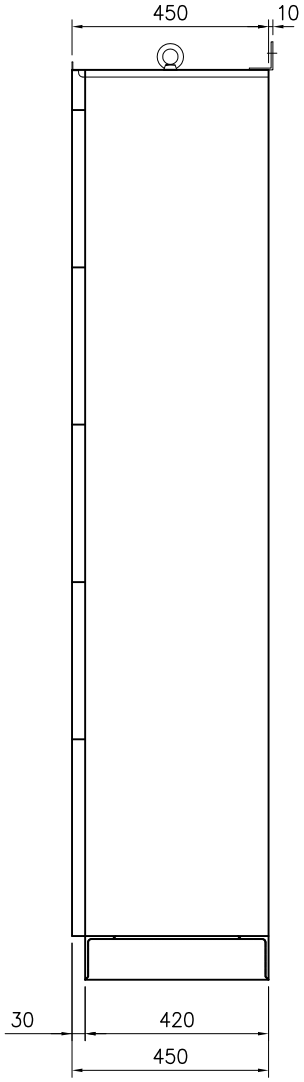

PROTECTION GRADE	IP 23
MATERIAL	STEEL 2.3t
WEIGHT	ABOUT 250kg
PAINT COLOR	MUNSELL NO. 7.5 BG 7/2

NO.1 LOCAL GROUP STARTER PANEL		
NO.	CIRCUIT NO.	PANEL NAME
1	P6701	NO.1 F.W HYD. PUMP
2	P6711	HOT WATER CIRC. PUMP
3	P6721	F.W PUMP FOR W/F PACKAGE AIR CON.
4	P6731	NO.1 D.W HYD. PUMP
5	P6801	NO.2 F.W HYD. PUMP
6	P6821	HOT WATER CALOFIFIER
7	P6811	NO.2 D.W HYD. PUMP

MODEL OF NAME PLATE

WL	: SOURCE LAMP
GL	: RUN LAMP
3-0	: STOP
3C	: START
YL	: SPACE HEATER RUN
43SH	: SPACE HEATER(OFF-ON)
RL1	: AIR HIGH TEMP.
RL2	: L.O LOW PRESS
3R	: RESET
SS1	: MANU. - AUTO
COS	: LEAD - FOLLOW

- NOTE -

Ⓟ : FLAME RETURDANT PARTITION

0	1	2	3	4	5						
6	7	8	9	10	11						

PROJECT NO.	S5130	TITLE	OUTLINE VIEW NO.1 LOCAL GROUP STARTER PANEL
	HME	SHEET NO.	L01

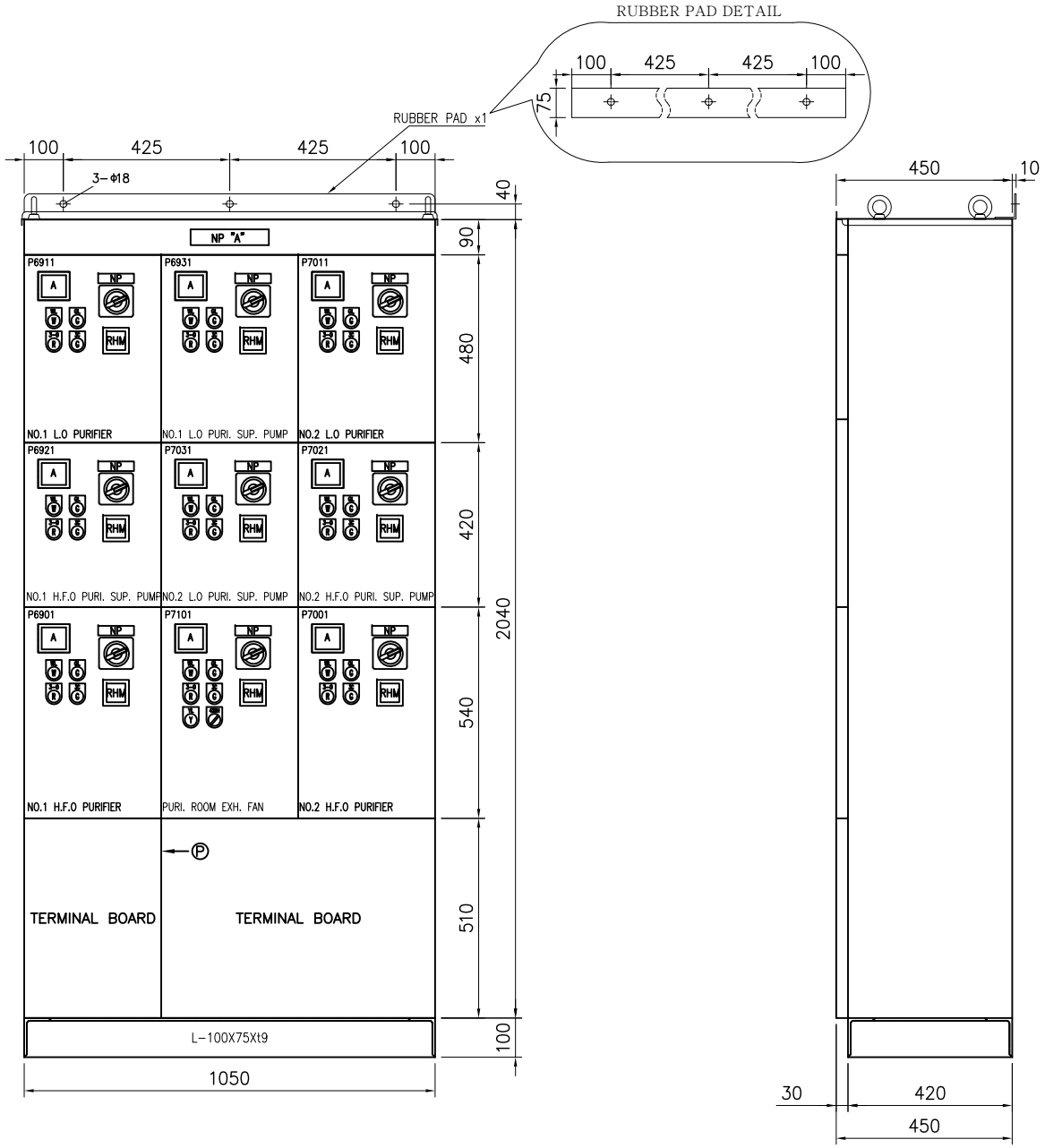

PROTECTION GRADE	IP 44
MATERIAL	STEEL 2.3t
WEIGHT	ABOUT 390kg
PAINT COLOR	MUNSELL NO. 7.5 BG 7/2

NO.2 LOCAL GROUP STARTER PANEL		
NO.	CIRCUIT NO.	PANEL NAME
1	P6901	NO.1 H.F.O PURIFIER
2	P6921	NO.1 H.F.O PURI. SUP. PUMP
3	P6911	NO.1 L.O PURIFIER
4	P6931	NO.1 L.O PURI. SUP. PUMP
5	P7001	NO.2 H.F.O PURIFIER
6	P7021	NO.2 H.F.O PURI. SUP. PUMP
7	P7011	NO.2 L.O PURIFIER
8	P7031	NO.2 L.O PURI. SUP. PUMP
9	P7101	PURI. ROOM EXH. FAN

MODEL OF NAME PLATE

WL	: SOURCE LAMP
GL	: RUN LAMP
3-0	: STOP
3C	: START
YL	: SPACE HEATER RUN
43SH	: SPACE HEATER(OFF-ON)
RL1	: AIR HIGH TEMP.
RL2	: L.O LOW PRESS
3R	: RESET
SS1	: MANU. - AUTO
COS	: LEAD - FOLLOW

- NOTE -

Ⓟ : FLAME RETURDANT PARTITION

0	1	2	3	4	5	
6	7	8	9	10	11	

PROJECT NO.	S5130	TITLE	OUTLINE VIEW NO.2 LOCAL GROUP STARTER PANEL
	HME	SHEET NO.	L02

PROTECTION GRADE	IP 23
MATERIAL	STEEL 2.3t
WEIGHT	ABOUT 90kg
PAINT COLOR	MUNSELL NO. 7.5 BG 7/2

NO.3 LOCAL GROUP STARTER PANEL		
NO.	CIRCUIT NO.	PANEL NAME
1	P7201	L.O TRANS. PUMP
2	P7211	SLUDGE PUMP
3	P7301	OILY WATER SEPARATOR

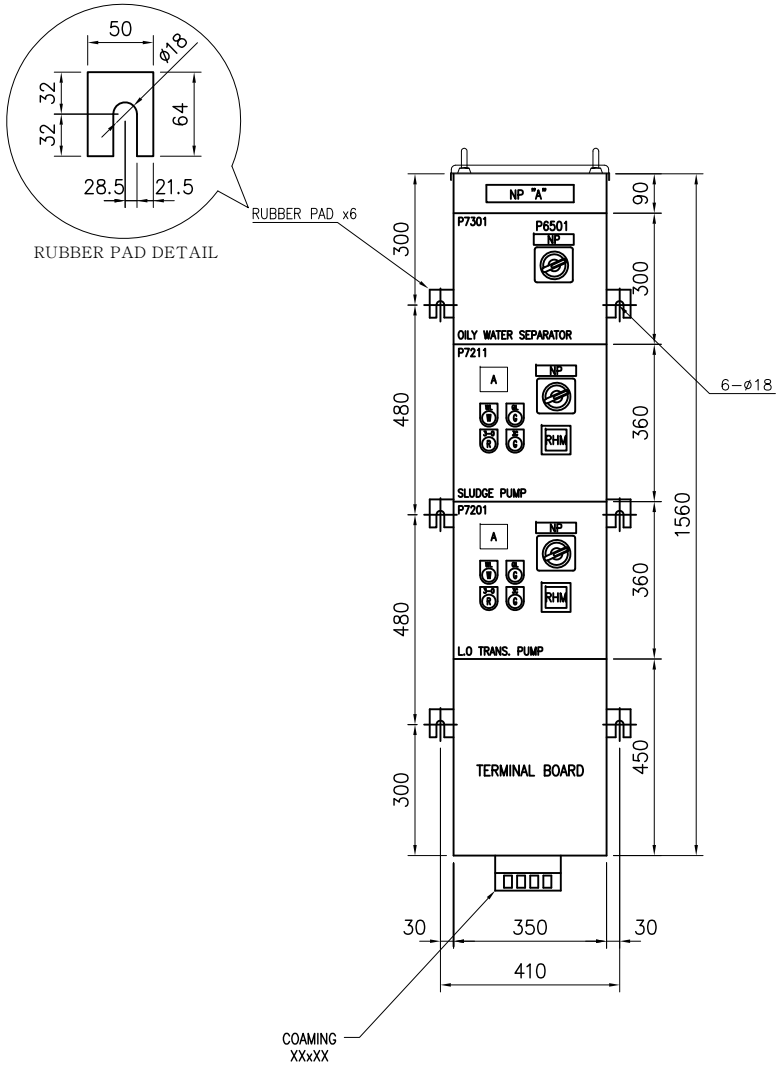

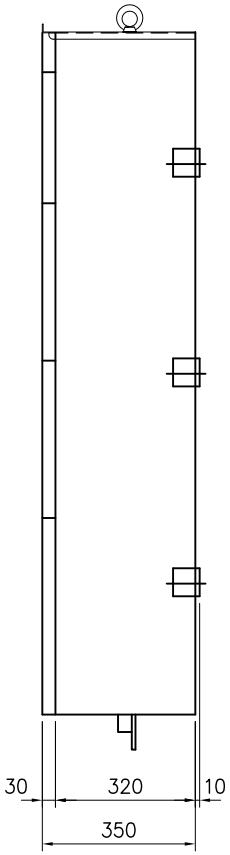

MODEL OF NAME PLATE

WL	: SOURCE LAMP
GL	: RUN LAMP
3-0	: STOP
3C	: START
YL	: SPACE HEATER RUN
43SH	: SPACE HEATER(OFF-ON)
RL1	: AIR HIGH TEMP.
RL2	: L.O LOW PRESS
3R	: RESET
SS1	: MANU. - AUTO
COS	: LEAD - FOLLOW

PROJECT NO. S5130		TITLE	OUTLINE VIEW NO.3 LOCAL GROUP STARTER PANEL
HME		SHEET NO.	L03

0	1	2	3	4	5
6	7	8	9	10	11

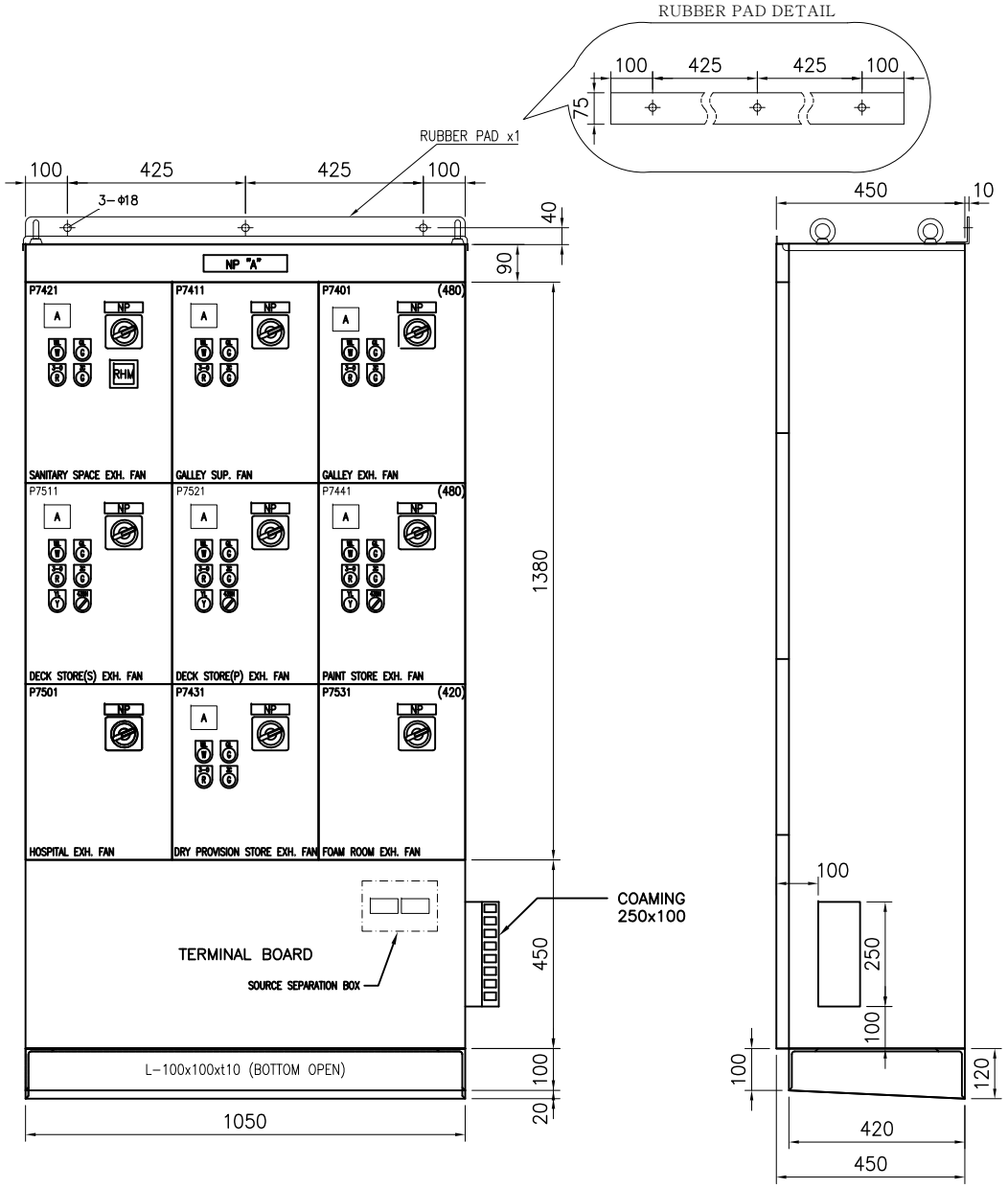

PROTECTION GRADE	IP 23
MATERIAL	STEEL 2.3t
WEIGHT	ABOUT 360kg
PAINT COLOR	MUNSELL NO. 7.5 BG 7/2

NO.4 LOCAL GROUP STARTER PANEL		
NO.	CIRCUIT NO.	PANEL NAME
1	P7401	GALLEY EXH. FAN
2	P7411	GALLEY SUP. FAN
3	P7421	SANITARY SPACE EXH. FAN
4	P7431	DRY PROVISION STORE EXH. FAN
5	P7441	PAINT STORE EXH. FAN
6	P7501	HOSPITAL EXH. FAN
7	P7511	DECK STORE(S) EXH. FAN
8	P7521	DECK STORE(P) EXH. FAN
8	P7531	FOAM ROOM EXH. FAN

MODEL OF NAME PLATE

WL	: SOURCE LAMP
GL	: RUN LAMP
3-0	: STOP
3C	: START
YL	: SPACE HEATER RUN
43SH	: SPACE HEATER(OFF-ON)
RL1	: AIR HIGH TEMP.
RL2	: L.O LOW PRESS
3R	: RESET
SS1	: MANU. - AUTO
COS	: LEAD - FOLLOW

PROJECT NO.	S5130	TITLE	OUTLINE VIEW NO.4 LOCAL GROUP STARTER PANEL
	HME	SHEET NO.	L04

0	1	2	3	4	5
6	7	8	9	10	11

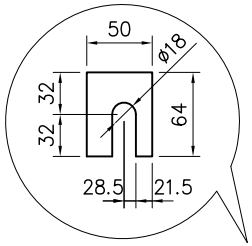

RUBBER PAD DETAIL

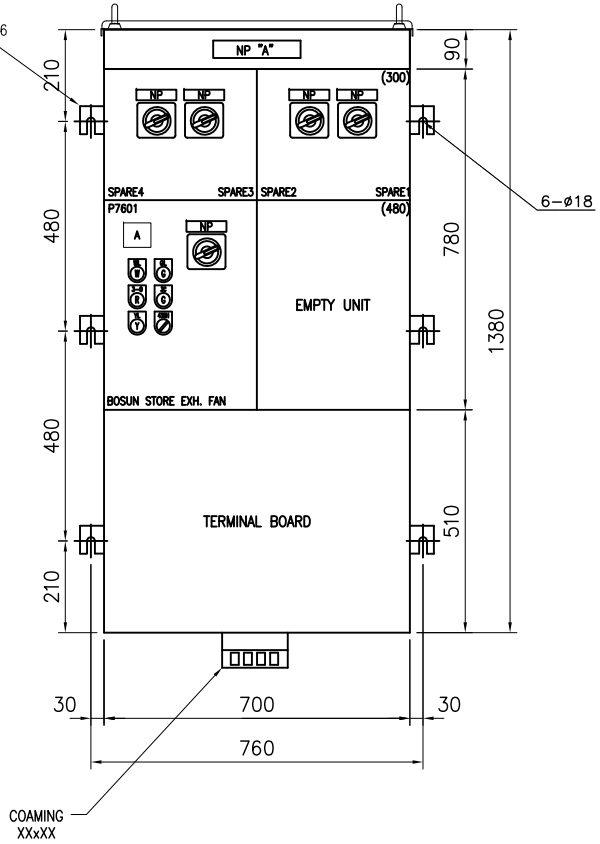

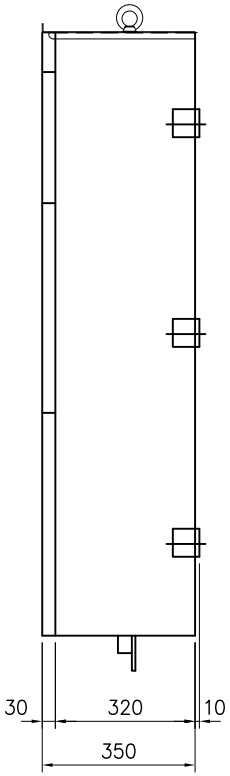

PROTECTION GRADE	IP 44
MATERIAL	STEEL 2.3t
WEIGHT	ABOUT 125kg
PAINT COLOR	MUNSELL NO. 7.5 BG 7/2

NO.5 LOCAL GROUP STARTER PANEL		
NO.	CIRCUIT NO.	PANEL NAME
1	P7601	BOSUN STORE EXH. FAN
2		SPARE1
3		SPARE2
4		SPARE3
5		SPARE4

MODEL OF NAME PLATE

WL	: SOURCE LAMP
GL	: RUN LAMP
3-0	: STOP
3C	: START
YL	: SPACE HEATER RUN
43SH	: SPACE HEATER(OFF-ON)
RL1	: AIR HIGH TEMP.
RL2	: L.O LOW PRESS
3R	: RESET
SS1	: MANU. - AUTO
COS	: LEAD - FOLLOW

0	1	2	3	4	5						
6	7	8	9	10	11						

PROJECT NO.	S5130	TITLE	OUTLINE VIEW NO.5 LOCAL GROUP STARTER PANEL
	HME	SHEET NO.	L05

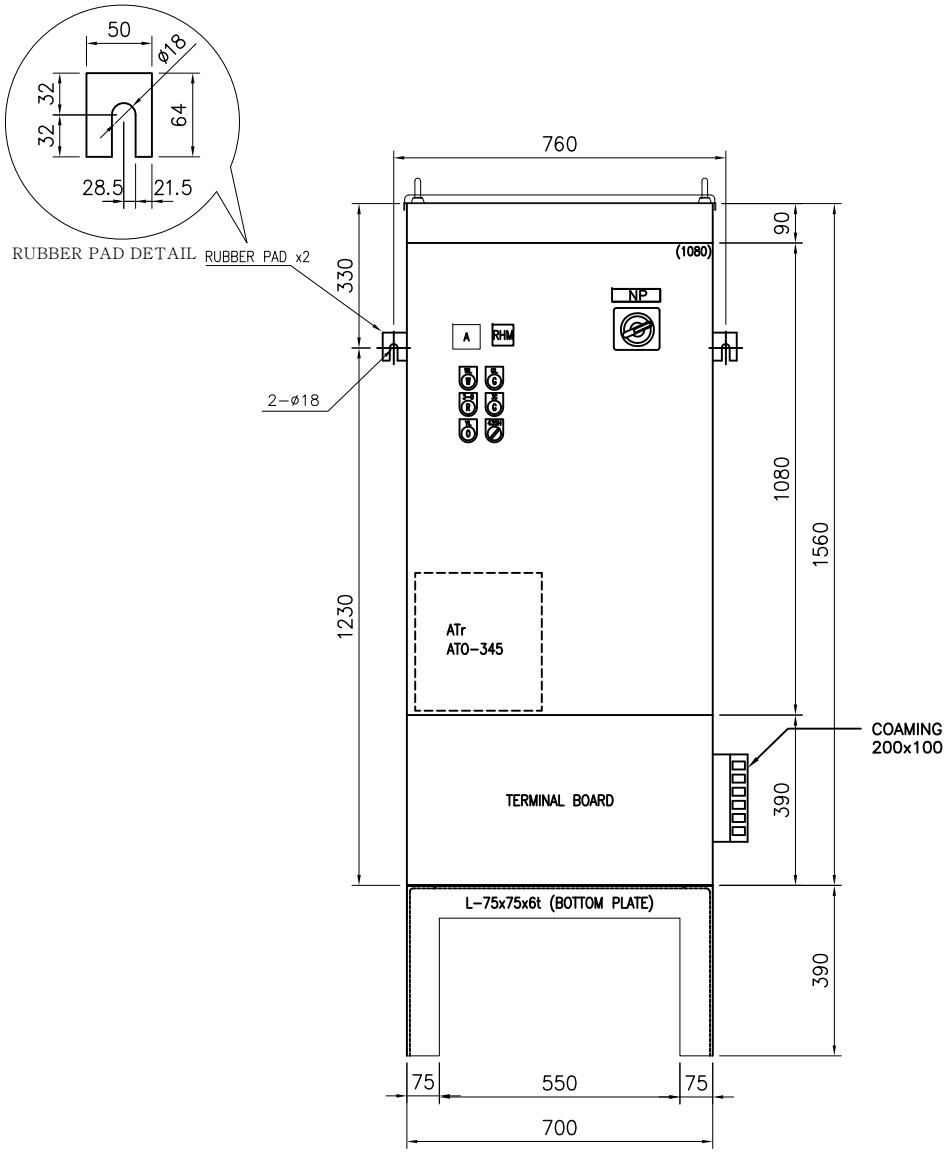

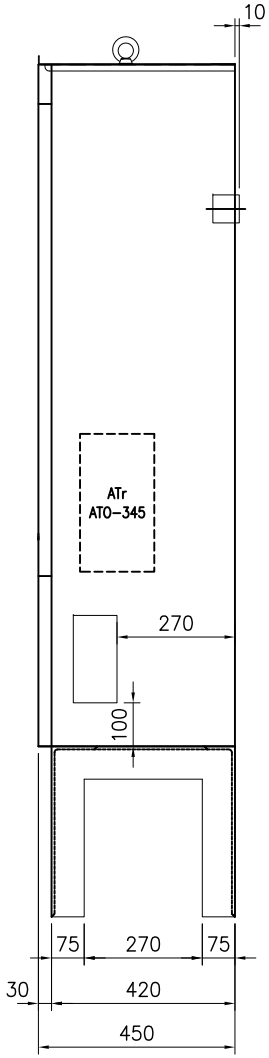

PROTECTION GRADE	IP 23
MATERIAL	STEEL 2.3t
WEIGHT	ABOUT 165kg
PAINT COLOR	MUNSELL NO. 7.5 BG 7/2

LOCAL INDIVIDUAL STARTER PANEL		
NO.	CIRCUIT NO.	PANEL NAME
1	P8101	EM'CY FIRE PUMP

MODEL OF NAME PLATE

WL	: SOURCE LAMP
GL	: RUN LAMP
3-0	: STOP
3C	: START
YL	: SPACE HEATER RUN
43SH	: SPACE HEATER(OFF-ON)
RL1	: AIR HIGH TEMP.
RL2	: L.O LOW PRESS
3R	: RESET
SS1	: MANU. - AUTO
COS	: LEAD - FOLLOW

0	1	2	3	4	5	
6	7	8	9	10	11	

PROJECT NO.	S5130	TITLE	OUTLINE VIEW INDIVIDUAL STARTER PANEL
	HME	SHEET NO.	L06

PROTECTION GRADE	IP 23
MATERIAL	STEEL 2.3t
WEIGHT	ABOUT 37kG
PAINT COLOR	MUNSELL NO. 7.5 BG 7/2

LOCAL INDIVIDUAL STARTER PANEL		
NO.	CIRCUIT NO.	PANEL NAME
1	P4901	E/R WORKWHOP WELDING AREA EXH. FAN

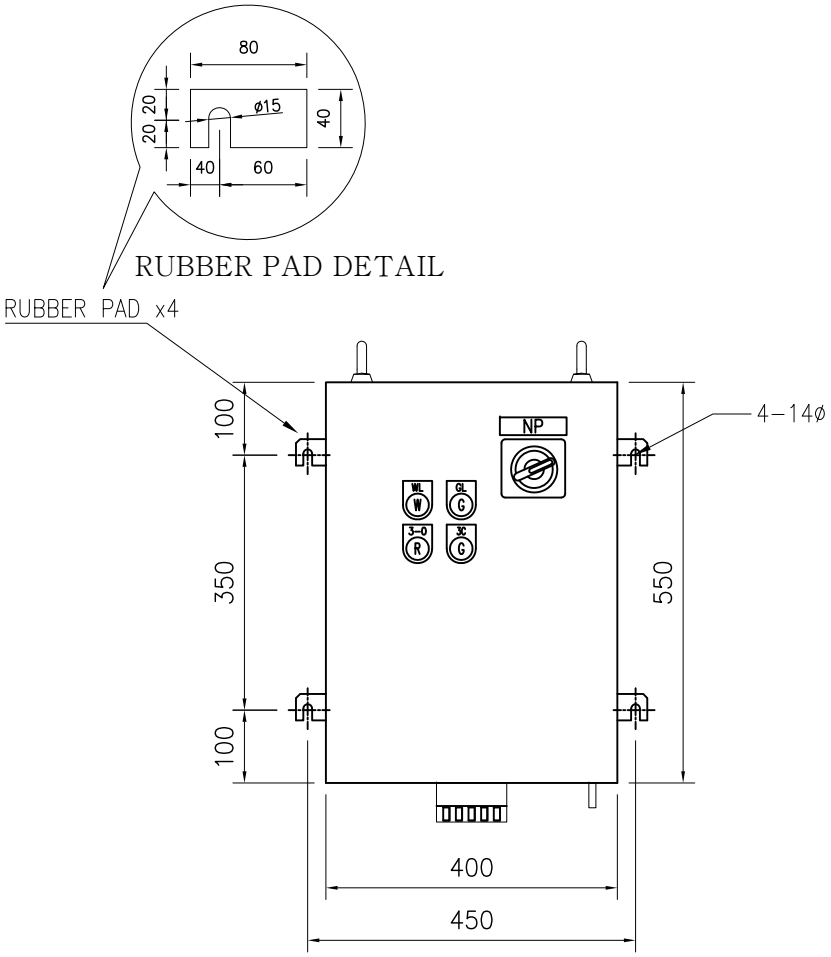

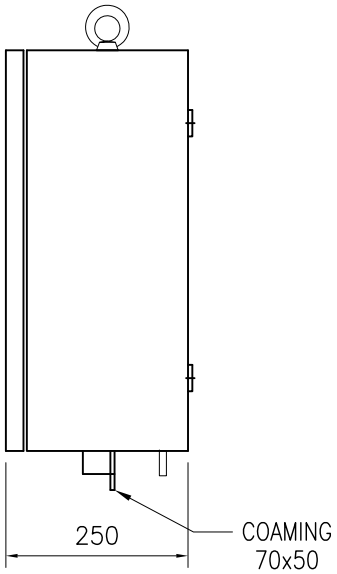

MODEL OF NAME PLATE

WL	: SOURCE LAMP
GL	: RUN LAMP
3-0	: STOP
3C	: START
YL	: SPACE HEATER RUN
43SH	: SPACE HEATER(OFF-ON)
RL1	: AIR HIGH TEMP.
RL2	: L.O LOW PRESS
3R	: RESET
SS1	: MANU. - AUTO
COS	: LEAD - FOLLOW

PROJECT NO.	S5130	TITLE	OUTLINE VIEW INDIVIDUAL STARTER PANEL
	HME	SHEET NO.	L07

0	1	2	3	4	5
6	7	8	9	10	11

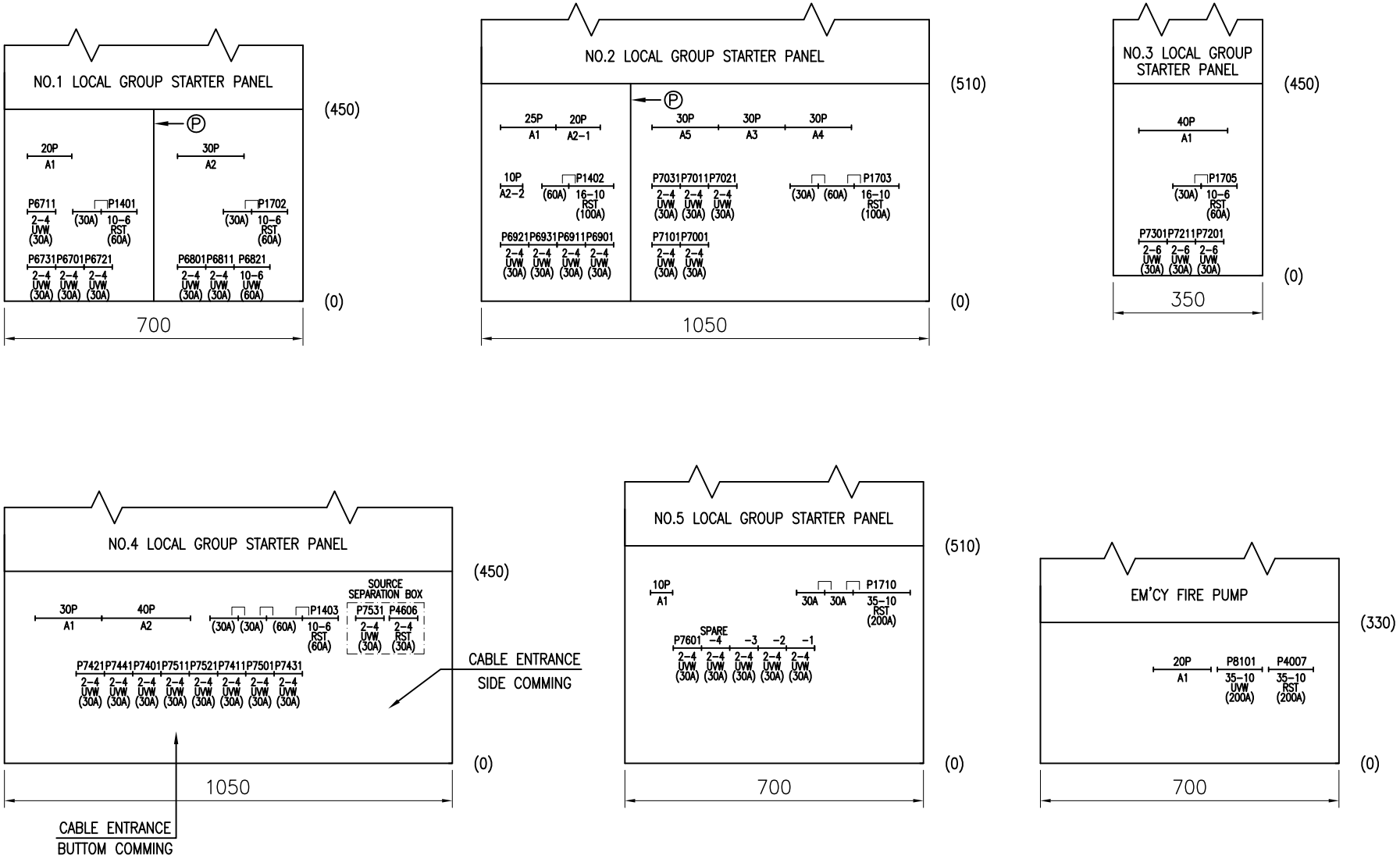

– NOTE –

Ⓟ : FLAME RETURDANT PARTITION

0	1	2	3	4	5
6	7	8	9	10	11

PROJECT NO.	S5130	TITLE	TERMINAL ARRANGEMENT
	HME	SHEET NO.	TA1

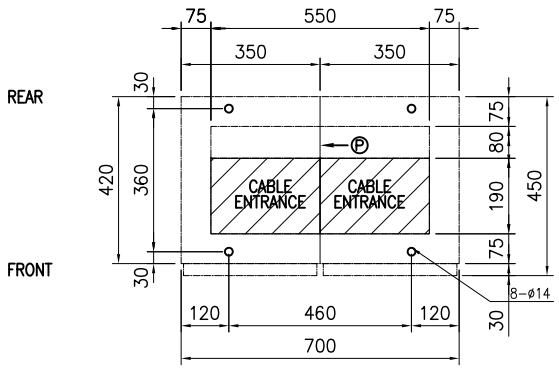

PANEL NAME : 1LGSP

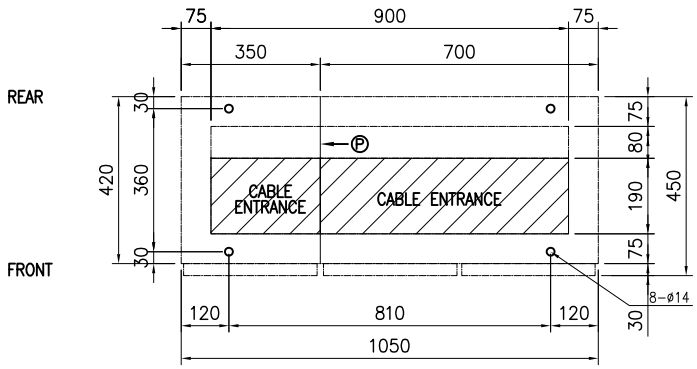

PANEL NAME : 2LGSP

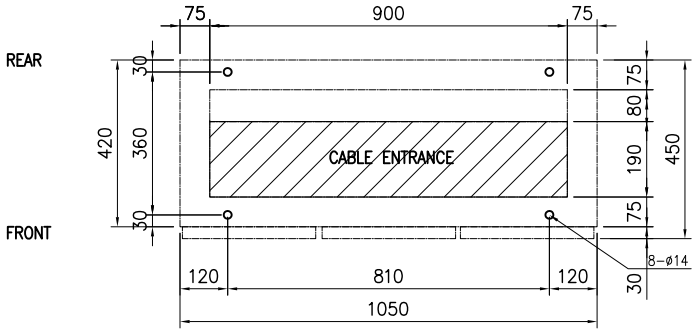

PANEL NAME : 4LGSP

– NOTE –

Ⓟ : FLAME RETURDANT PARTITION

0	1	2	3	4	5
6	7	8	9	10	11

PROJECT NO.	S5130	TITLE	CABLE ENTRANCE BOTTOM VIEW
HME		SHEET NO.	CE01

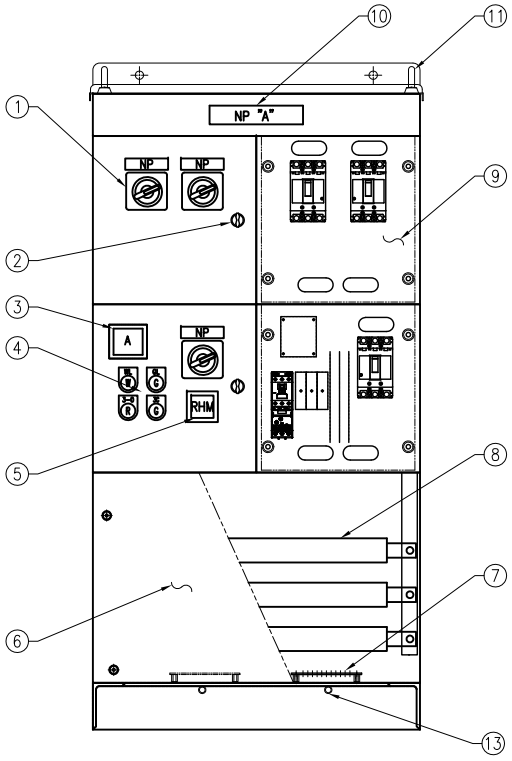

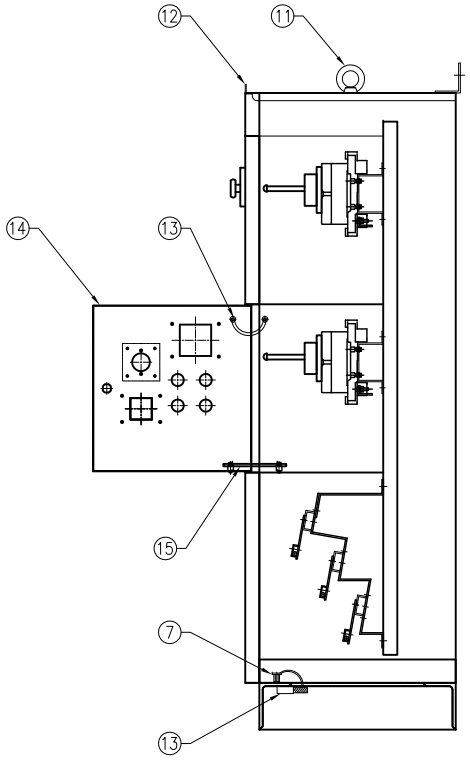

– NOTE –

1 : MCCB OPERATING HANDLE
2 : DOOR LOCKER
3 : AMMETER
4 : LAMP & CONTROL PUSH BUTTON
5 : RUNNING HOUR MATER
6 : TERMINAL PLATE
7 : EARTH BUS
8 : POWER & CONTROL TERMINAL BLOCK
9 : UNIT MOUNTING PLATE
10 : LGSP NAME PLATE
11 : LIFTING EYE BOLT
12 : TOP PLATE
13 : EARTH BOLT
14 : CONTROL UNIT DOOR
15 : DOOR STOPPER

ADDED PAGE

0	1	2	3	4	5
6	7	8	9	10	11

PROJECT NO.	S5130	TITLE	CONSTRUTION VIEW TYPICAL DRAWING
HME		SHEET NO.	CV01

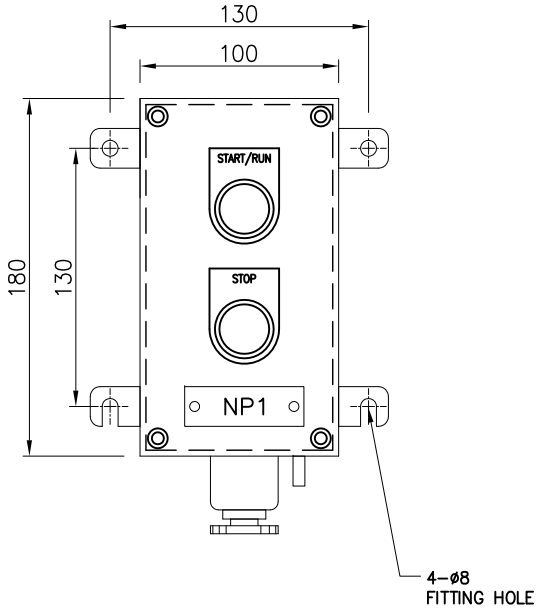

FRONT VIEW

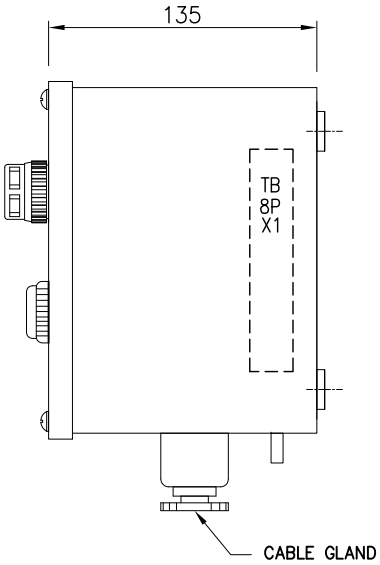

SIDE VIEW

SCHEMATIC DIAGRAM (SD)

TYPE : A1

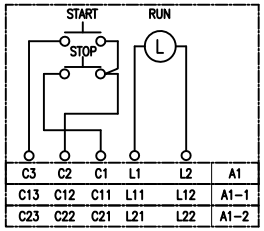

TYPE : A2

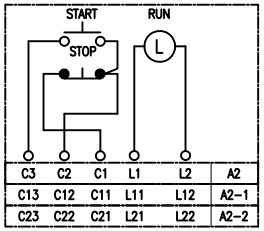

SYMBOL	TYPE	REMARK
START/RUN	KH-2204P-11G(24V)	NON LOCKABLE TYPE
STOP	KH-2201-11R	NON LOCKABLE TYPE

- NOTE -

1. COLOR : MUNSELL NO. 7.5 BG 7/2
2. MATERIAL : STEEL
3. WEIGHT : 2.7 KG
4. Q'TY : 1EA

NO.	POSI	CIRC NO.	NP TYPE	NAME PLATE	IP GRADE	SD TYPE	CABLE	CABLE GLAND
1	NP1	P8105	PA	EM'CY FIRE PUMP	IP 44	A1	FMC-7	G:20

PROJECT No.	S5130	TITLE	PUSH BUTTON BOX
HME		SHEET No.	RPB01

0	1	2	3	4	5
6	7	8	9	10	11

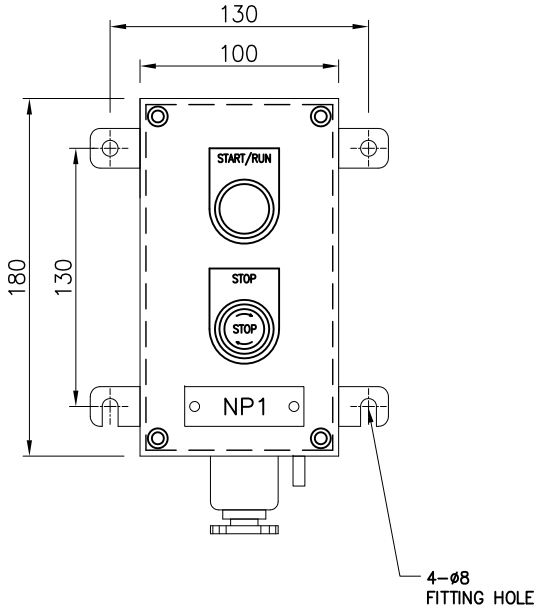

FRONT VIEW

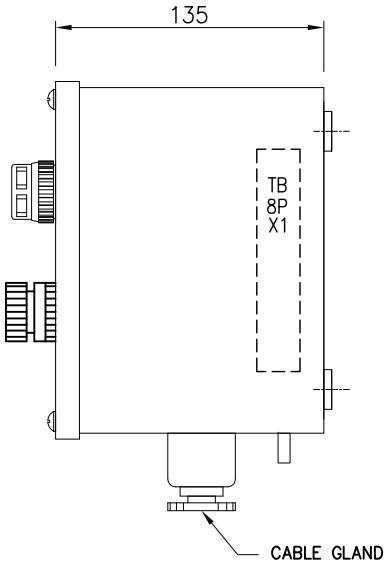

SIDE VIEW

SCHEMATIC DIAGRAM (SD)

TYPE : A1

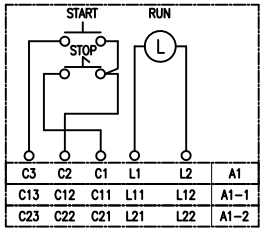

TYPE : A2

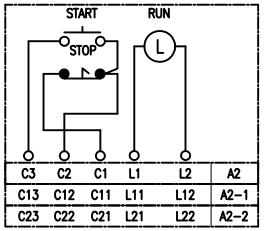

SYMBOL	TYPE	REMARK
START/RUN	KH-2204P-11G(24V)	NON LOCKABLE TYPE
STOP	YSSP322-11	LOCKABLE TYPE

- NOTE -

1. COLOR : MUNSELL NO. 7.5 BG 7/2
2. MATERIAL : STEEL
3. WEIGHT : 2.7 KG
4. Q'TY : 11EA

NO.	POSI	CIRC NO.	NP TYPE	NAME PLATE	IP GRADE	SD TYPE	CABLE	CABLE GLAND
2	NP1	P2122	PA	M/E J.W PRE-HEATER CIRC. PUMP	IP 44	A1	MC-7	G:15
3	NP1	P2132	PA	M/E AIR COOLER CLEANING PUMP	IP 44	A1	MC-7	G:15
4	NP1	P3223	PA	M.G.O SHIFTING PUMP	IP 44	A1	MC-7	G:15
5	NP1	P4322	PA	S/G ROOM SUPPLY FAN	IP 44	A2	MC-7	G:15
6	NP1	P4332	PA	CO2 ROOM EXH. FAN	IP 44	A2	MC-7	G:15
7	NP1	P5510	PA	E/R WORKSHOP WELDING AREA EXH. FAN	IP 44	A2	MC-7	G:15
8	NP1	P6712	PA	HOT WATER CIRC. PUMP	IP 44	A2	MC-7	G:15
9	NP1	P7102	PA	PURIFIER ROOM EXH. FAN	IP 44	A2	MC-7	G:15
10	NP1	P7202	PA	L.O TRANS. PUMP	IP 44	A2	MC-7	G:15
11	NP1	P7213	PA	SLUDGE PUMP	IP 44	A2	MC-7	G:15
12	NP1	P7217	PA	SLUDGE PUMP [NEAR W.O. SETT. TANK]	IP 44	A2	MC-7	G:15

PROJECT No.	S5130	TITLE	PUSH BUTTON BOX
	HME	SHEET No.	RPB02

0	1	2	3	4	5
6	7	8	9	10	11

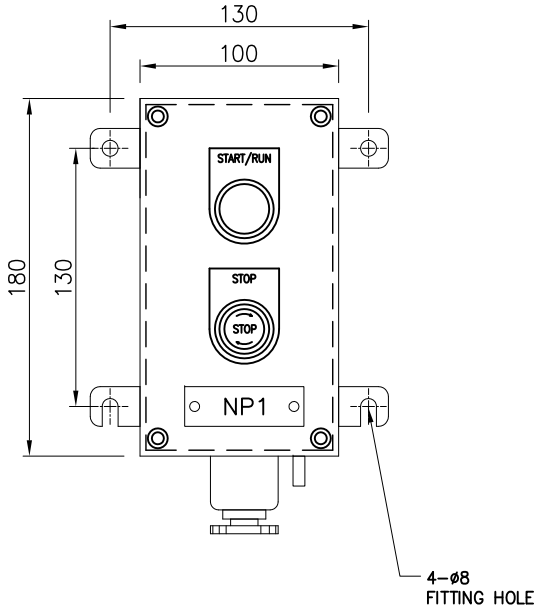

FRONT VIEW

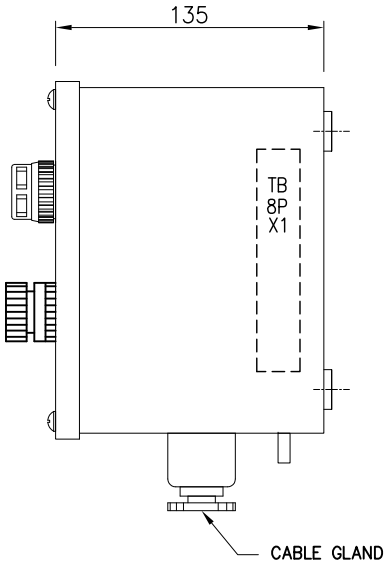

SIDE VIEW

SCHEMATIC DIAGRAM (SD)

TYPE : A1

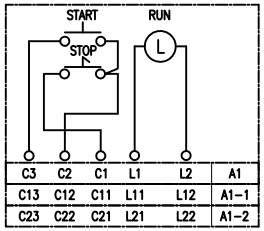

TYPE : A2

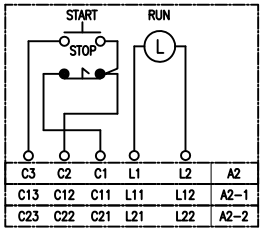

SYMBOL	TYPE	REMARK
START/RUN	KH-2204P-11G(24V)	NON LOCKABLE TYPE
STOP	YSSP322-11	LOCKABLE TYPE

- NOTE -

1. COLOR : MUNSELL NO. 7.5 BG 7/2
2. MATERIAL : STEEL
3. WEIGHT : 2.7 KG
4. Q'TY : 3EA

NO.	POSI	CIRC NO.	NP TYPE	NAME PLATE	IP GRADE	SD TYPE	CABLE	CABLE GLAND
13	NP1	P7422	PA	SANITARY SPACE EXH. FAN	IP 44	A2	MC-7	G:15
14	NP1	P7432	PA	DRY PROVISION STORE EXH. FAN	IP 44	A2	MC-7	G:15
15	NP1	P7602	PA	BOSUN STORE EXH. FAN	IP 44	A2	MC-7	G:15

PROJECT No.	S5130	TITLE	PUSH BUTTON BOX
	HME	SHEET No.	RPB03

0	1	2	3	4	5
6	7	8	9	10	11

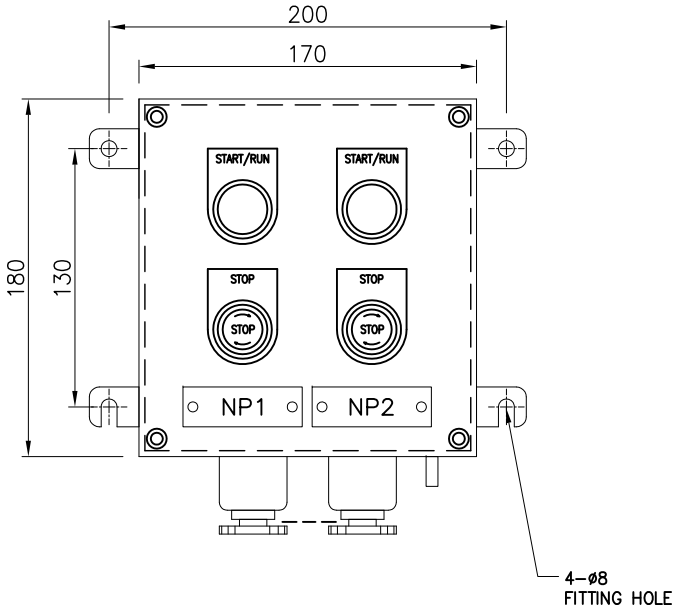

FRONT VIEW

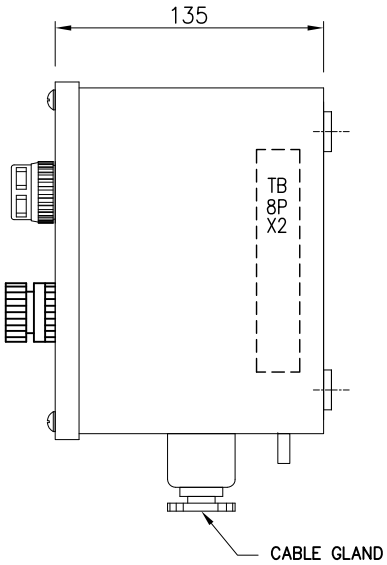

SIDE VIEW

SCHEMATIC DIAGRAM (SD)

TYPE : A1

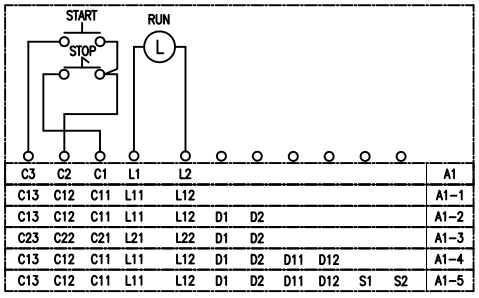

TYPE : A2

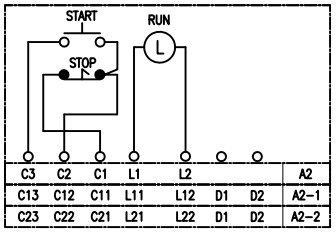

SYMBOL	TYPE	REMARK
START/RUN	KH-2204P-11G(24V)	NON LOCKABLE TYPE
STOP	YSSP322-11	LOCKABLE TYPE

- NOTE -

1. COLOR : MUNSELL NO. 7.5 BG 7/2
2. MATERIAL : STEEL
3. WEIGHT : 3.2 KG
4. Q'TY : 5EA

NO.	POSI	CIRC NO.	NP TYPE	NAME PLATE	IP GRADE	SD TYPE	CABLE	CABLE GLAND
16	NP1	P2002,03	PA	NO.1 MAIN L.O PUMP	IP 44	A1-2	MC-2 MC-7X2	G:15x3
	NP2	P2703	PA	NO.2 MAIN L.O PUMP	IP 44	A1		
17	NP1	P2102,03	PA	NO.1 L.T C.F.W PUMP	IP 44	A1-2	MC-12 MC-7 MC-2	G:20 G:15x2
	NP2	P2802	PA	NO.2 L.T C.F.W PUMP	IP 44	A1		
18	NP1	P2112,13	PA	NO.1 M/E J.W PUMP	IP 44	A1-2	MC-12 MC-7 MC-2	G:20 G:15x2
	NP2	P2804	PA	NO.2 M/E J.W PUMP	IP 44	A1		
19	NP1	P2416	PA	H.F.O TRANS. PUMP	IP 44	A1	MC-7x2	G:15x2
	NP2	P3206	PA	M.G.O TRANS. PUMP	IP 44	A1-1		
20	NP1	P2502,03	PA	NO.1 AUX. BOILER FEED WATER PUMP	IP 44	A1-2	MC-7x2 MC-2	G:15x3
	NP2	P3102	PA	NO.2 AUX. BOILER FEED WATER PUMP	IP 44	A1		

PROJECT No.	S5130	TITLE	PUSH BUTTON BOX
	HME	SHEET No.	RPB04

0	1	2	3	4	5
6	7	8	9	10	11

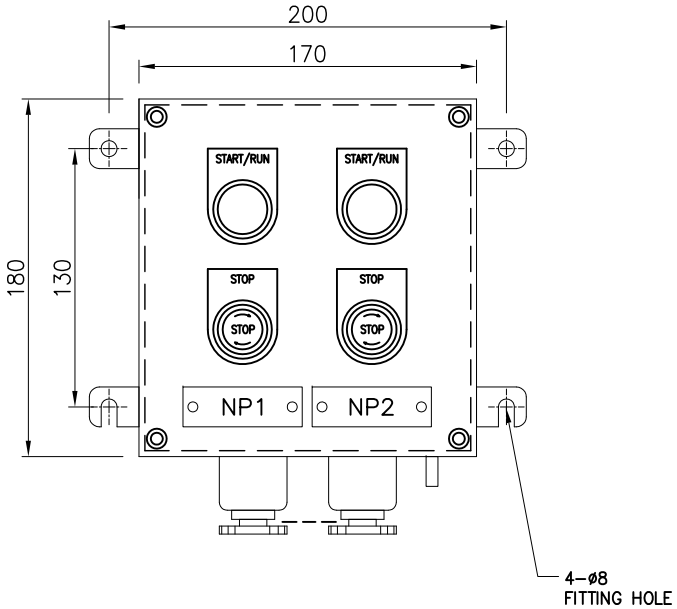

FRONT VIEW

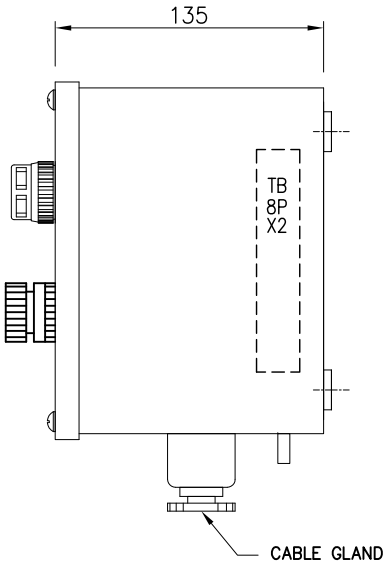

SIDE VIEW

SCHEMATIC DIAGRAM (SD)

TYPE : A1

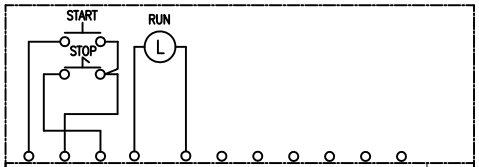

C3	C2	C1	L1	L2							A1
C13	C12	C11	L11	L12							A1-1
C13	C12	C11	L11	L12	D1	D2					A1-2
C23	C22	C21	L21	L22	D1	D2					A1-3
C13	C12	C11	L11	L12	D1	D2	D11	D12			A1-4
C13	C12	C11	L11	L12	D1	D2	D11	D12	S1	S2	A1-5

TYPE : A2

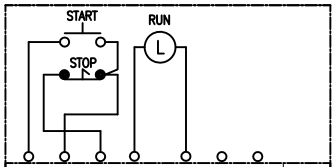

C3	C2	C1	L1	L2			A2
C13	C12	C11	L11	L12	D1	D2	A2-1
C23	C22	C21	L21	L22	D1	D2	A2-2

SYMBOL	TYPE	REMARK
START/RUN	KH-2204P-11G(24V)	NON LOCKABLE TYPE
STOP	YSSP322-11	LOCKABLE TYPE

- NOTE -

1. COLOR : MUNSELL NO. 7.5 BG 7/2
2. MATERIAL : STEEL
3. WEIGHT : 3.2 KG
4. Q'TY : 3EA

NO.	POSI	CIRC NO.	NP TYPE	NAME PLATE	IP GRADE	SD TYPE	CABLE	CABLE GLAND
21	NP1	P2512,13	PA	NO.1 COMP. BOILER FEED WATER PUMP	IP 44	A1-2	MC-7x2 MC-2	G:15x3
	NP2	P3112	PA	NO.2 COMP. BOILER FEED WATER PUMP	IP 44	A1		
22	NP1	P2522,23	PA	NO.1 DECK WATER SEAL PUMP	IP 44	A1-2	MC-7x2 MC-2	G:15x3
	NP2	P3122	PA	NO.2 DECK WATER SEAL PUMP	IP 44	A1		
23	NP1	P2602,03	PA	NO.1 S/T L.O PUMP	IP 44	A1-2	MC-7x2 MC-2	G:15x3
	NP2	P2722	PA	NO.2 S/T L.O PUMP	IP 44	A1		

PROJECT No.	S5130	TITLE	PUSH BUTTON BOX
	HME	SHEET No.	RPB05A

0	1	2	3	4	5
6	7	8	9	10	11

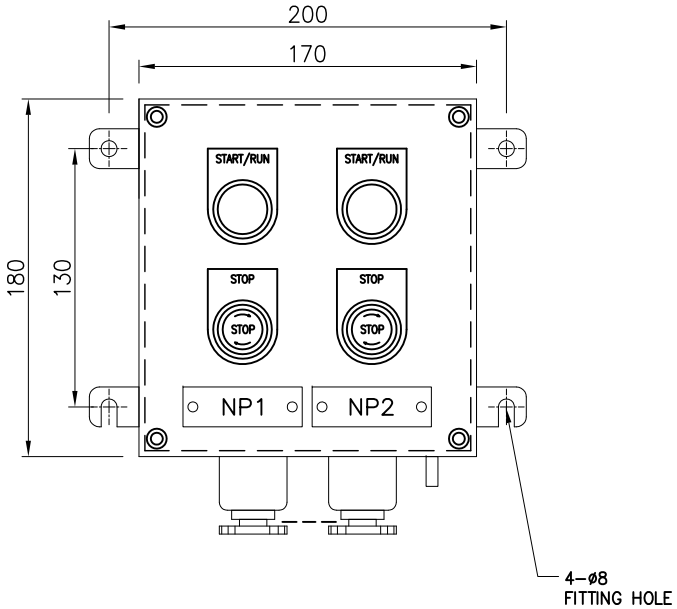

FRONT VIEW

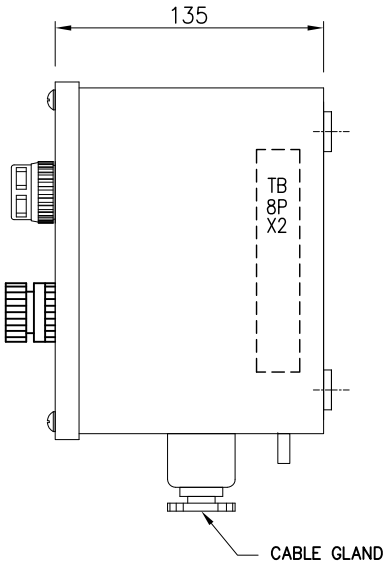

SIDE VIEW

SCHEMATIC DIAGRAM (SD)

TYPE : A1

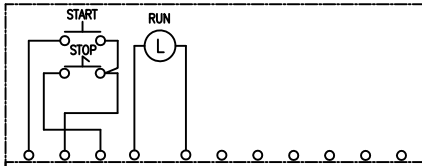

C3	C2	C1	L1	L2							A1
C13	C12	C11	L11	L12							A1-1
C13	C12	C11	L11	L12	D1	D2					A1-2
C23	C22	C21	L21	L22	D1	D2					A1-3
C13	C12	C11	L11	L12	D1	D2	D11	D12			A1-4
C13	C12	C11	L11	L12	D1	D2	D11	D12	S1	S2	A1-5

TYPE : A2

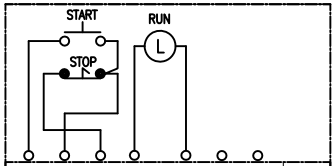

C3	C2	C1	L1	L2			A2
C13	C12	C11	L11	L12	D1	D2	A2-1
C23	C22	C21	L21	L22	D1	D2	A2-2

SYMBOL	TYPE	REMARK
START/RUN	KH-2204P-2G(AC220V)	NON LOCKABLE TYPE
STOP	YSSP322-11	LOCKABLE TYPE

- NOTE -

1. COLOR : MUNSELL NO. 7.5 BG 7/2
2. MATERIAL : STEEL
3. WEIGHT : 3.2 KG
4. Q'TY : 1EA

NO.	POSI	CIRC NO.	NP TYPE	NAME PLATE	IP GRADE	SD TYPE	CABLE	CABLE GLAND
34	NP1	P9905	PA	NO.1 MAIN C.S.W PUMP	IP 44	A1-1	MC-7x2	G:15x2
	NP2	P9906	PA	NO.2 MAIN C.S.W PUMP	IP 44	A1		

PROJECT No.	S5130	TITLE	PUSH BUTTON BOX
	HME	SHEET No.	RPB05B

0	1	2	3	4	5
6	7	8	9	10	11

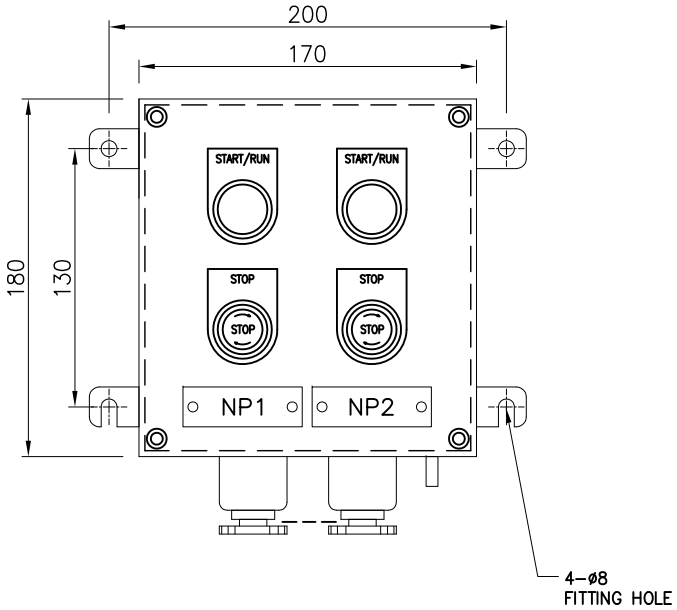

FRONT VIEW

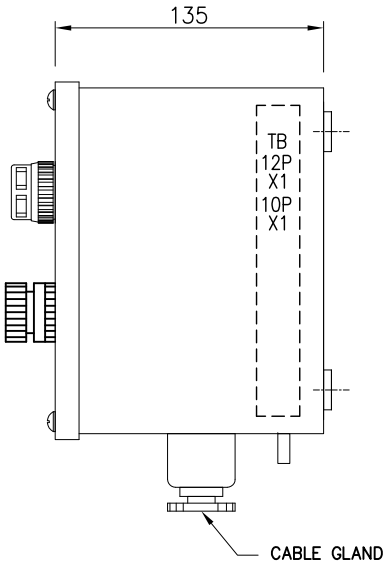

SIDE VIEW

SCHEMATIC DIAGRAM (SD)

TYPE : A1

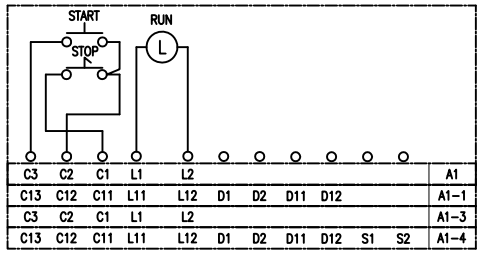

TYPE : A2

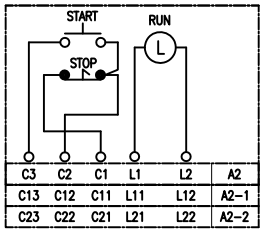

SYMBOL	TYPE	REMARK
START/RUN	KH-2204-TLG(24V)	NON LOCKABLE TYPE
STOP	YSSP322-11	LOCKABLE TYPE

- NOTE -

1. COLOR : MUNSELL NO. 7.5 BG 7/2
2. MATERIAL : STEEL
3. WEIGHT : 3.2 KG
4. Q'TY : 1EA

NO.	POSI	CIRC NO.	NP TYPE	NAME PLATE	IP GRADE	SD TYPE	CABLE	CABLE GLAND
24	NP1	P2404,05,06	PA	NO.1 MAIN AIR COMPRESSOR	IP 44	A1-1	MC-2X2 MC-19 MC-7	G:15x3 G:25
	NP2	P3003	PA	NO.2 MAIN AIR COMPRESSOR	IP 44	A1		

PROJECT No.	S5130	TITLE	PUSH BUTTON BOX
	HME	SHEET No.	RPB06

0	1	2	3	4	5
6	7	8	9	10	11

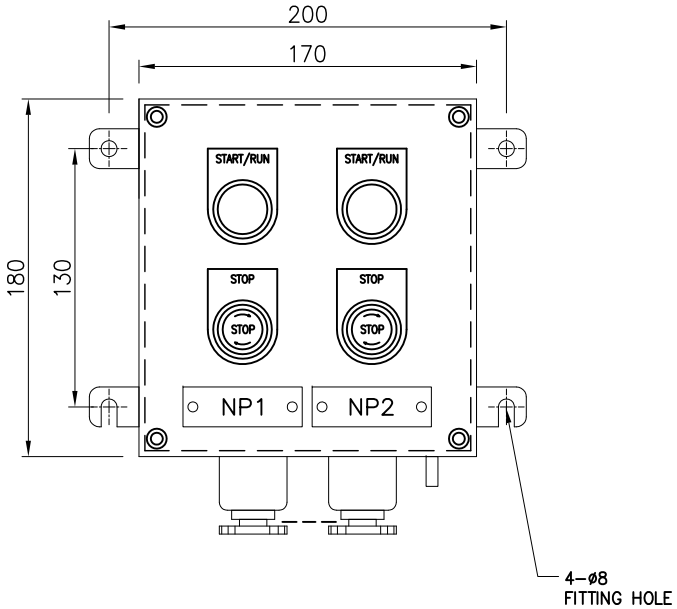

FRONT VIEW

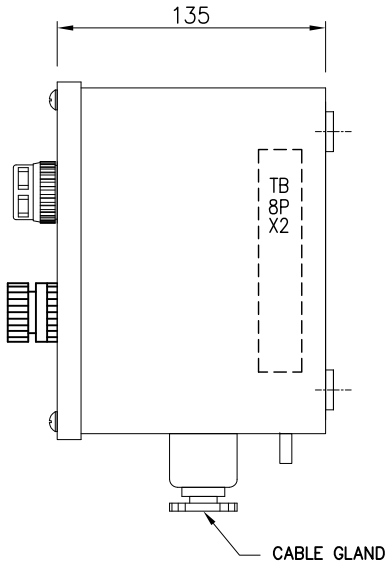

SIDE VIEW

SCHEMATIC DIAGRAM (SD)

TYPE : A1

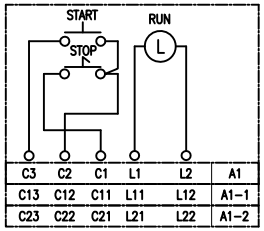

TYPE : A2

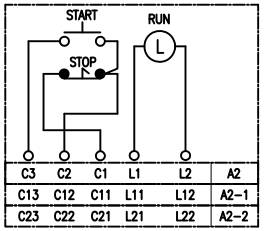

SYMBOL	TYPE	REMARK
START/RUN	KH-2204P-11G(24V)	NON LOCKABLE TYPE
STOP	YSSP322-11	LOCKABLE TYPE

- NOTE -

1. COLOR : MUNSELL NO. 7.5 BG 7/2
2. MATERIAL : STEEL
3. WEIGHT : 3.2 KG
4. Q'TY : 6EA

NO.	POSI	CIRC NO.	NP TYPE	NAME PLATE	IP GRADE	SD TYPE	CABLE	CABLE GLAND
25	NP1	P6802	PA	NO.1 F.W HYD. PUMP	IP 44	A2-1	MC-12	G:20
	NP2		PA	NO.2 F.W HYD. PUMP	IP 44	A2		
26	NP1	P6812	PA	NO.1 D.W HYD. PUMP	IP 44	A2-1	MC-12	G:20
	NP2		PA	NO.2 D.W HYD. PUMP	IP 44	A2		
27	NP1	P6922	PA	NO.1 H.F.O PURIFIER SUPPLY PUMP	IP 44	A2-1	MC-7x2	G:15x2
	NP2	P7022	PA	NO.2 H.F.O PURIFIER SUPPLY PUMP	IP 44	A2		
28	NP1	P6932	PA	NO.1 L.O PURIFIER SUPPLY PUMP	IP 44	A2-1	MC-7x2	G:15x2
	NP2	P7032	PA	NO.2 L.O PURIFIER SUPPLY PUMP	IP 44	A2		
29	NP1	P7402	PA	GALLEY EXH. FAN	IP 44	A2-1	MC-12	G:20
	NP2		PA	GALLEY SUPPLY FAN	IP 44	A2		

PROJECT No.	S5130	TITLE	PUSH BUTTON BOX
	HME	SHEET No.	RPB07

0	1	2	3	4	5
6	7	8	9	10	11

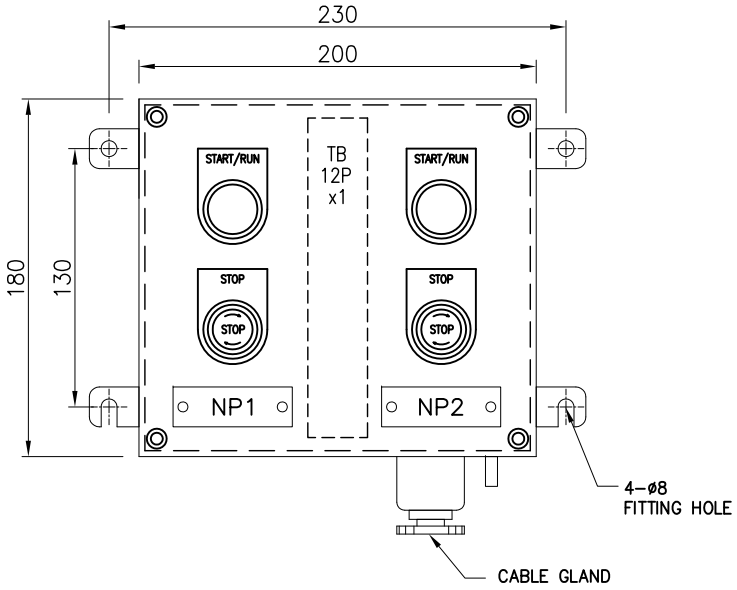

FRONT VIEW

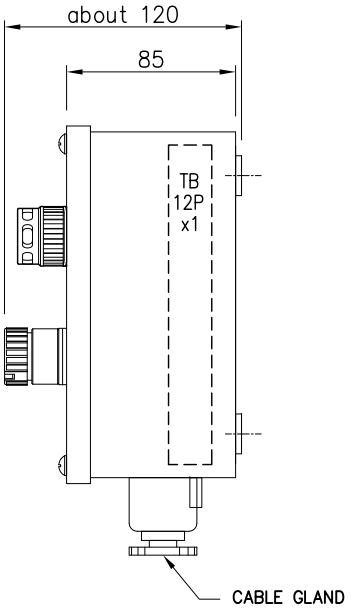

SIDE VIEW

SCHEMATIC DIAGRAM (SD)

TYPE : A1

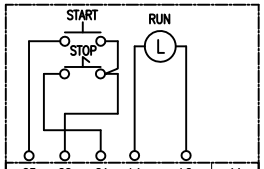

C3	C2	C1	L1	L2	A1
C13	C12	C11	L11	L12	A1-1
C23	C22	C21	L21	L22	A1-2

TYPE : A2

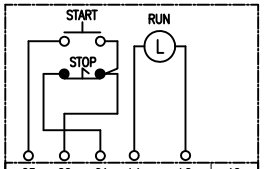

C3	C2	C1	L1	L2	A2
C13	C12	C11	L11	L12	A2-1
C23	C22	C21	L21	L22	A2-2

SYMBOL	TYPE	REMARK
START/RUN	KH-2204P-11G(24V)	NON LOCKABLE TYPE
STOP	YSSP322-11	LOCKABLE TYPE

- NOTE -

1. COLOR : MUNSELL NO. 7.5 BG 7/2
2. MATERIAL : STEEL
3. WEIGHT : 3.2 KG
4. Q'TY : 1EA

NO.	POSI	CIRC NO.	NP TYPE	NAME PLATE	IP GRADE	SD TYPE	CABLE	CABLE GLAND
30	NP1	P7512	PA	DECK STORE EXH. FAN (ST'BD)	IP 44	A2-1	MC-12	G:20
	NP2		PA	DECK STORE EXH. FAN (PORT)	IP 44	A2		

PROJECT No. S5130	TITLE: PUSH BUTTON BOX
HME	SHEET No. RPB08

0	1	2	3	4	5
6	7	8	9	10	11

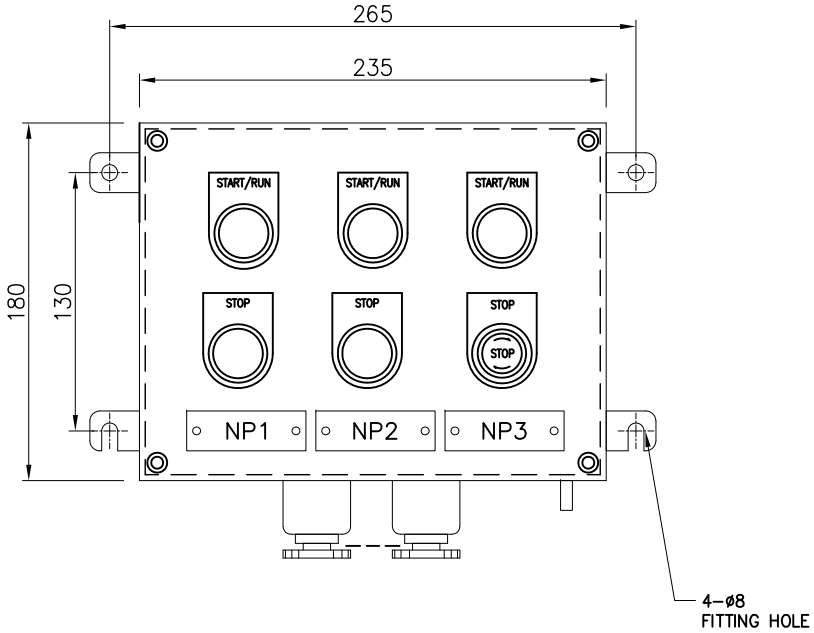

FRONT VIEW

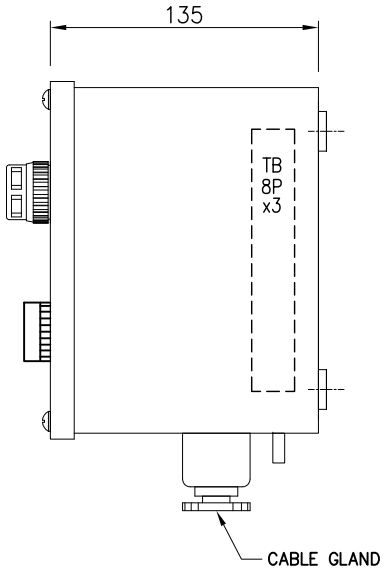

SIDE VIEW

SCHEMATIC DIAGRAM (SD)

TYPE : A1

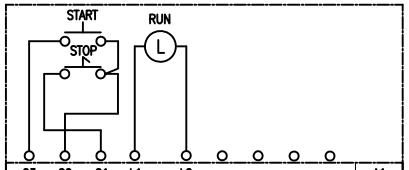

C3	C2	C1	L1	L2					A1
C13	C12	C11	L11	L12					A1-1
C13	C12	C11	L11	L12	D1	D2			A1-2
C23	C22	C21	L21	L22	D1	D2			A1-3
C13	C12	C11	L11	L12	D1	D2	S1	S2	A1-4
C23	C22	C21	L21	L22	D1	D2	S1	S2	A1-5

TYPE : A2

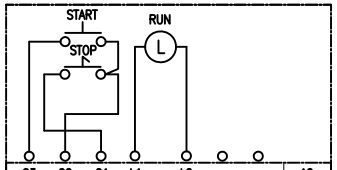

C3	C2	C1	L1	L2			A2
C13	C12	C11	L11	L12	D1	D2	A2-1
C23	C22	C21	L21	L22	D1	D2	A2-2

SYMBOL	TYPE	REMARK
START/RUN	KH-2204-TLG(24V)	NON LOCKABLE TYPE
STOP	KH-2201-11R	LOCKABLE TYPE
STOP	YSSP322-11	NON LOCKABLE TYPE

- NOTE -

1. COLOR : MUNSELL No. 7.5 BG 7/2
2. MATERIAL : STEEL
3. WEIGHT : 3.5 Kg
4. Q'TY : 1EA

NO.	POSI	CIRC No.	NP TYPE	NAME PLATE	IP GRADE	SD TYPE	CABLE	CABLE GLAND
31	NP1	P2303,04 P2813,14	PA	NO.1 FIRE, BILGE & G/S PUMP	IP 44	A1-3	MC-2 MC-12 MC-19	G:15x2 G:20 G:25
	NP2		PA	NO.2 FIRE, BILGE & G/S PUMP	IP 44	A1-2		
	NP3		PA	SCRUBBER C.S.W PUMP	IP 44	A1		

PROJECT No.	S5130	TITLE	PUSH BUTTON BOX		
	HME	SHEET No.	RPB09		

0	1	2	3	4	5
6	7	8	9	10	11

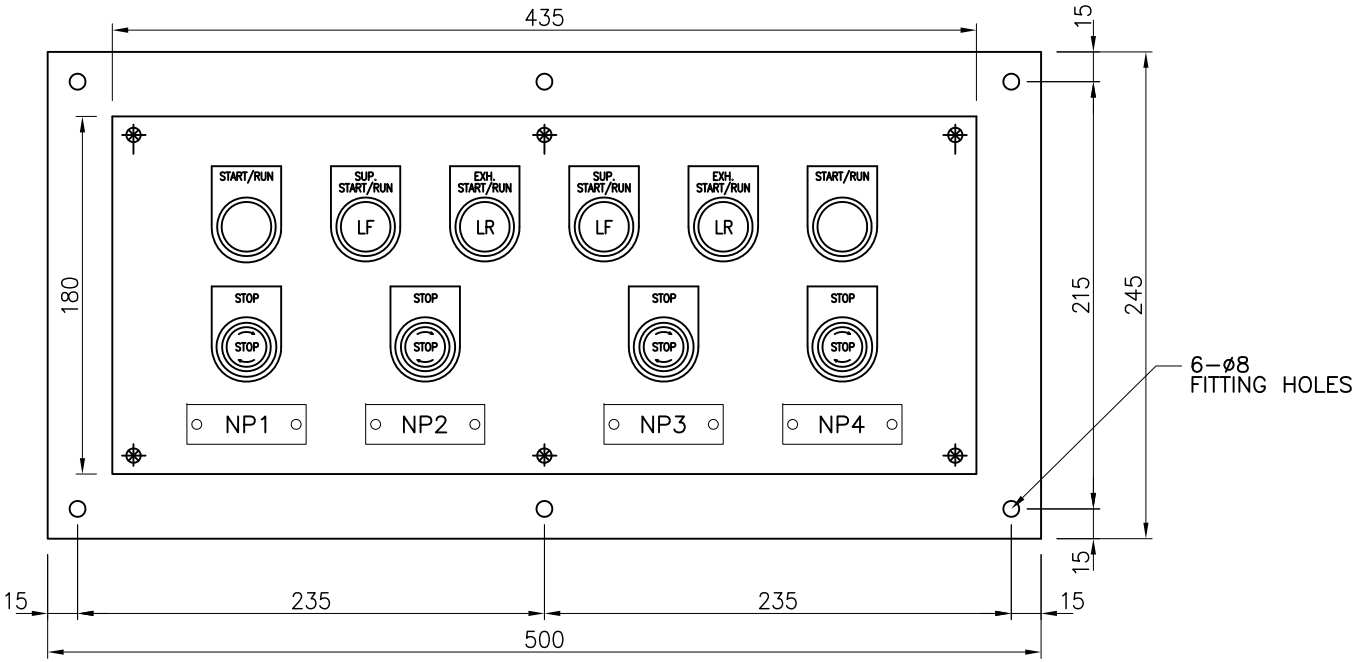

FRONT VIEW

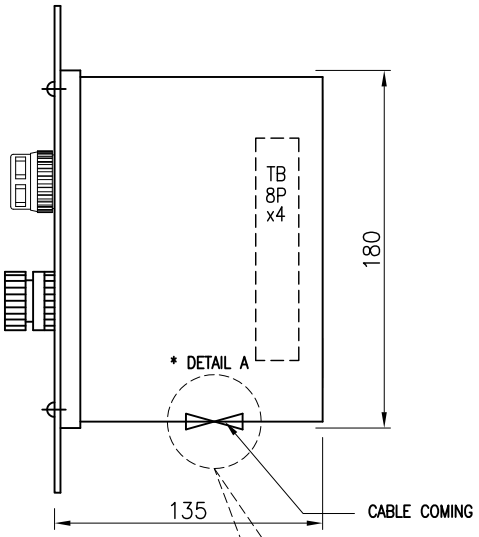

SIDE VIEW

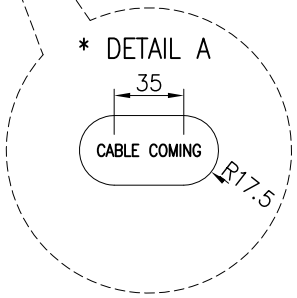

SCHEMATIC DIAGRAM (SD)

TYPE : A1

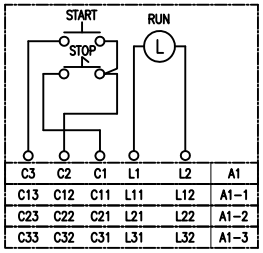

C3	C2	C1	L1	L2	A1
C13	C12	C11	L11	L12	A1-1
C23	C22	C21	L21	L22	A1-2
C33	C32	C31	L31	L32	A1-3

TYPE : A2

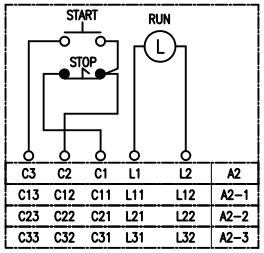

C3	C2	C1	L1	L2	A2
C13	C12	C11	L11	L12	A2-1
C23	C22	C21	L21	L22	A2-2
C33	C32	C31	L31	L32	A2-3

TYPE : A3

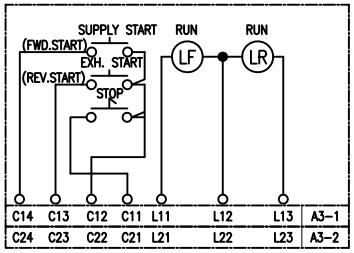

C14	C13	C12	C11	L11	L12	L13	A3-1
C24	C23	C22	C21	L21	L22	L23	A3-2

SYMBOL	TYPE	REMARK
START/RUN	KH-2204P-11G(24V)	NON LOCKABLE TYPE
STOP	YSSP322-11	LOCKABLE TYPE

- NOTE -

1. COLOR : MUNSELL NO. 7.5 BG 7/2
2. MATERIAL : STEEL
3. WEIGHT : 4.0 KG
4. Q'TY : 1EA

NO.	POSI	CIRC NO.	NP TYPE	NAME PLATE	IP GRADE	SD TYPE	CABLE	CABLE GLAND
32	NP4	P2212 P2913	PA	NO.1 E/R SUPPLY FAN	IP 44	A1	MC-12x2	NOT USE
	NP3		PA	NO.2 E/R SUPPLY/EXH. FAN	IP 44	A3-1		
	NP2		PA	NO.3 E/R SUPPLY/EXH. FAN	IP 44	A3-2		
	NP1		PA	NO.4 E/R SUPPLY FAN	IP 44	A1-3		

PROJECT No.	S5130	TITLE	PUSH BUTTON BOX
HME		SHEET No.	RPB10

0	1	2	3	4	5
6	7	8	9	10	11

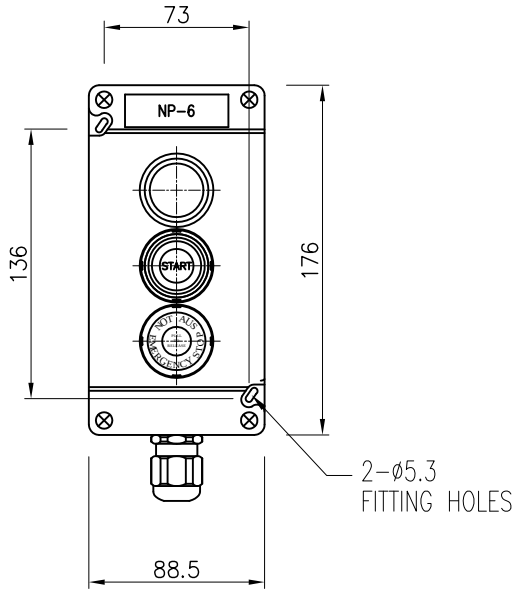

FRONT VIEW

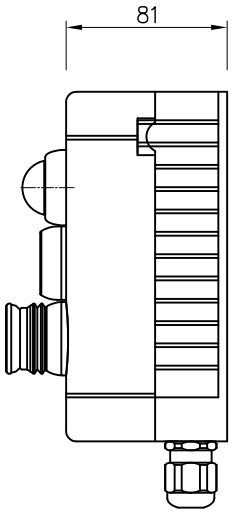

SIDE VIEW

SCHEMATIC DIAGRAM (SD)

TYPE : A1

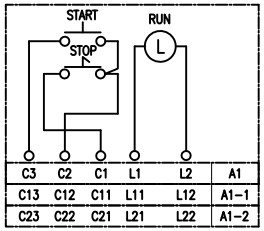

TYPE : A2

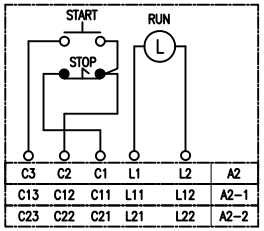

- NOTE -

1. COLOR : BLACK
2. WEIGHT : 0.8 KG
3. Q'TY : 1EA

NO.	POSI	CIRC NO.	NP TYPE	NAME PLATE	IP GRADE	SD TYPE	CABLE	CABLE GLAND
33	NP1	P7442	NP-6	PAINT STORE EXH. FAN	EEXD IIB T4	A2	MC-7	G:15C

PROJECT No.	S5130	TITLE	PUSH BUTTON BOX
HME		SHEET No.	RPB11

0	1	2	3	4	5
6	7	8	9	10	11

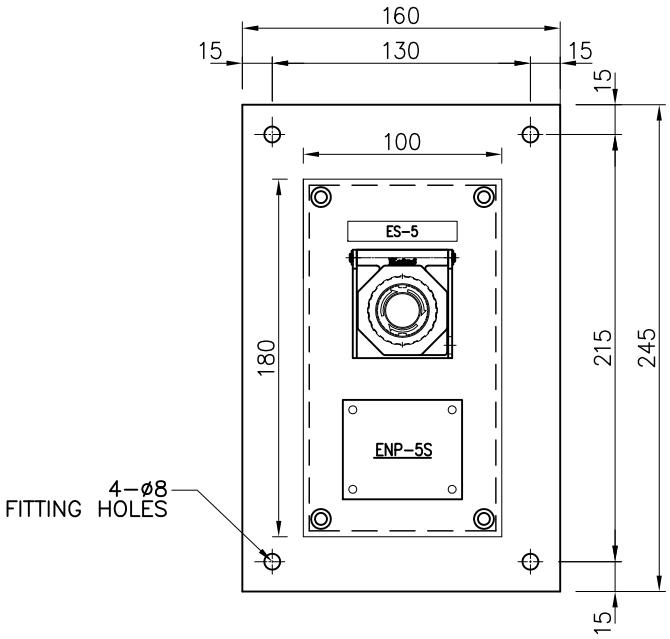

FRONT VIEW

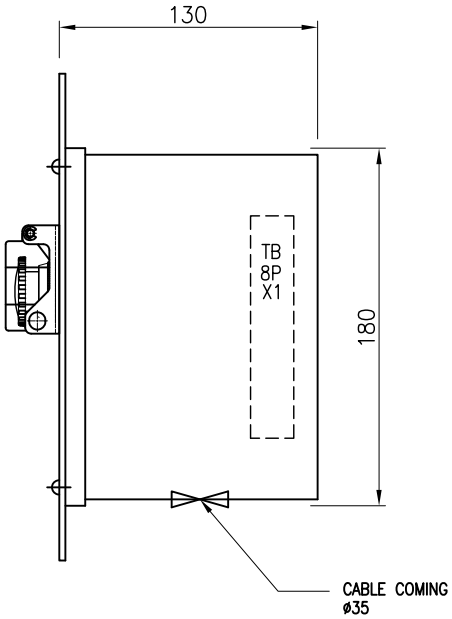

SIDE VIEW

EM'CY NAME PLATE

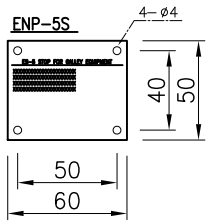

SCHEMATIC DIAGRAM (SD)

TYPE : A1

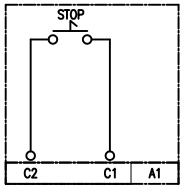

TYPE : A2

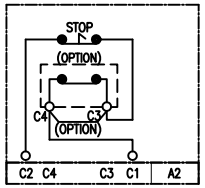

SYMBOL	TYPE	REMARK
STOP	KPB25ER-R22	LOCKABLE TYPE

- NOTE -

1. COLOR : RED(5RA4/13)
2. MATERIAL : STEEL
3. WEIGHT : 3.0 KG
4. Q'TY : 1EA

NO.	POSI	CIRC NO.	NP TYPE	NAME PLATE	IP GRADE	SD TYPE	CABLE	CABLE GLAND
1	NP1	P0907 P6505	ES	EM'CY STOP FOR GALLEY EQUIPMENTS & GALLEY FAN	IP 44		FMC-7 FMC-2	NOT USE

PROJECT No. S5130		TITLE	EM'CY PUSH BUTTON BOX
HME		SHEET No.	EPB12-1

0	1	2	3	4	5
6	7	8	9	10	11

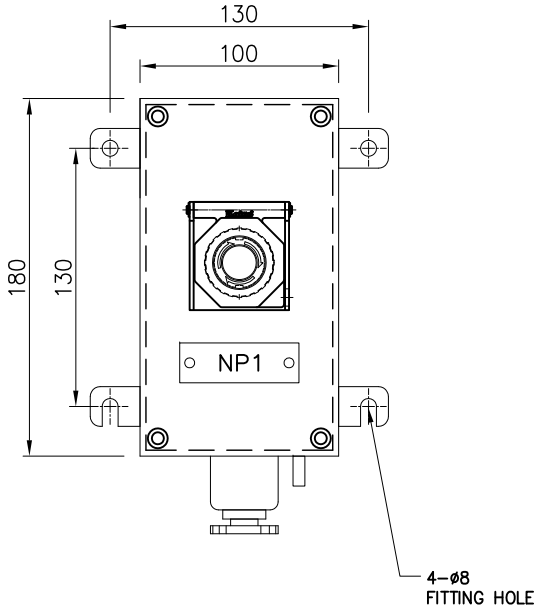

FRONT VIEW

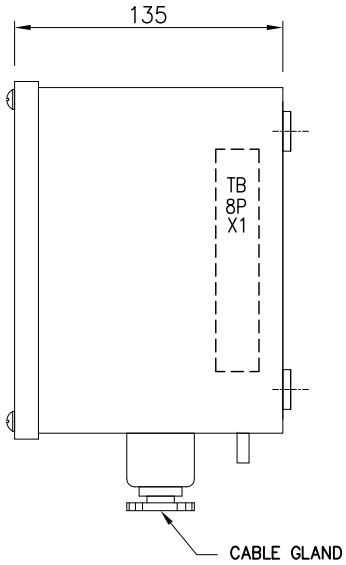

SIDE VIEW

SCHEMATIC DIAGRAM (SD)

TYPE : A1

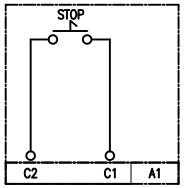

TYPE : A2

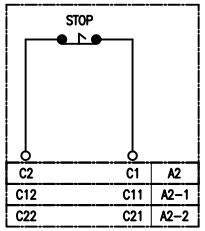

SYMBOL	TYPE	REMARK
STOP	KPB25ER-R22	LOCKABLE TYPE

- NOTE -

1. COLOR : RED(5RA4/13)
2. MATERIAL : STEEL
3. WEIGHT : 2.5 KG
4. Q'TY : 1EA

NO.	POSI	CIRC NO.	NP TYPE	NAME PLATE	IP GRADE	SD TYPE	CABLE	CABLE GLAND
5	NP1	P10001	PA	EM'CY STOP FOR F.O SUPPLY UNIT	IP 44	A2	MC2	G:15
6	NP1	P5115	PA	EM'CY STOP FOR SEWAGE TREATMENT CONTROL PANEL	IP 44	A2	FMC2	G:15

ADDED PAGE

0	1	2	3	4	5
6	7	8	9	10	11

PROJECT No. S5130

HME

TITLE: PUSH BUTTON BOX

SHEET No. RPB12-2

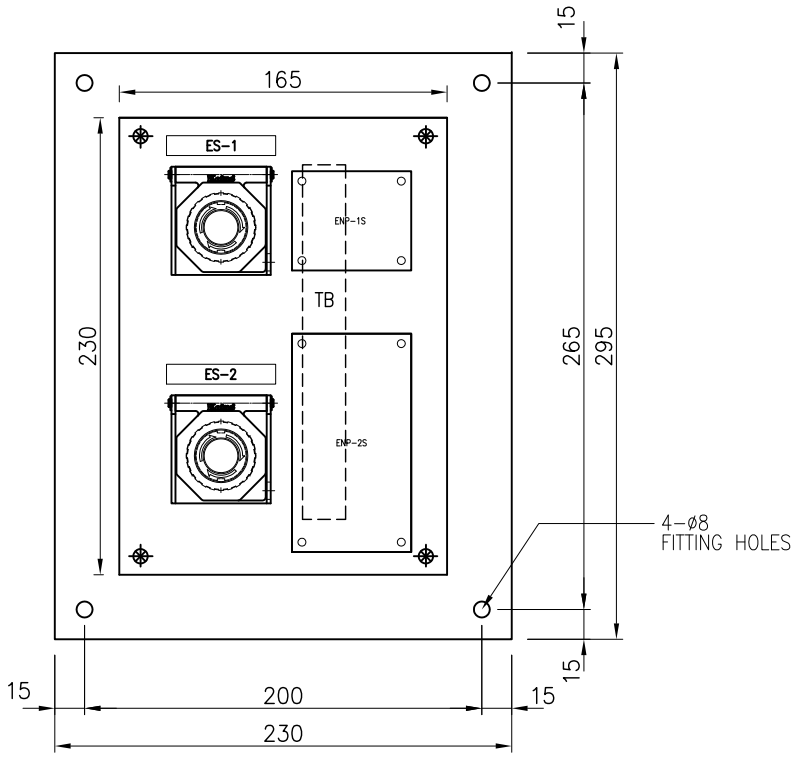

FRONT VIEW

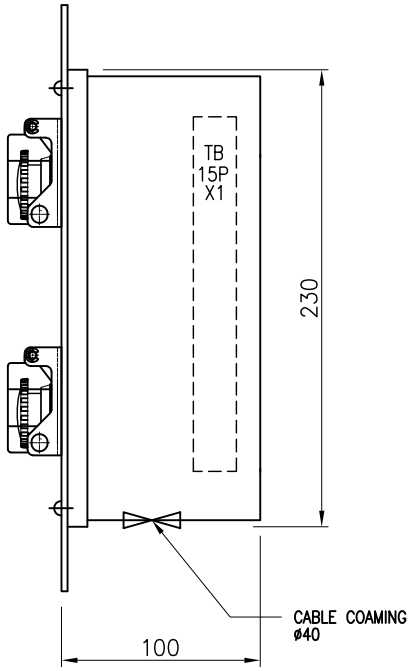

SIDE VIEW

EM'CY NAME PLATE

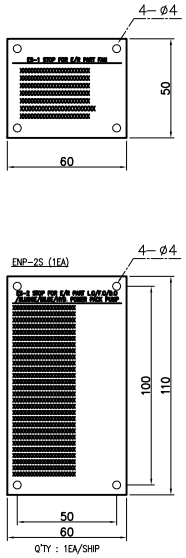

SCHEMATIC DIAGRAM (SD)

TYPE : A1

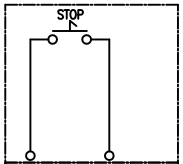

TYPE : A2

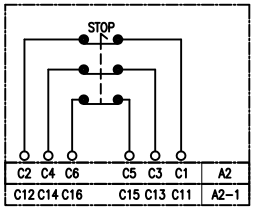

INSTRUMENTS CIRCUIT

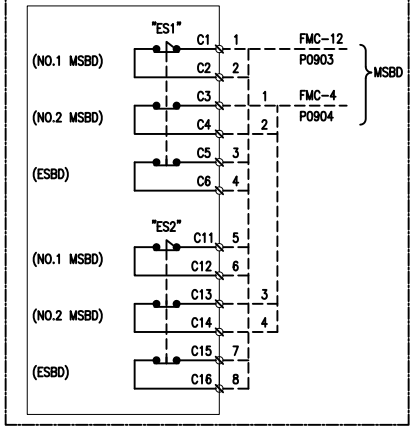

SYMBOL	TYPE	REMARK
STOP	KPB25ER-R22	LOCKABLE TYPE

- NOTE -

1. COLOR : RED(5RA4/13)
2. MATERIAL : STEEL
3. WEIGHT : 3.0 KG
4. Q'TY : 1EA

NO.	POSI	CIRC NO.	NP TYPE	NAME PLATE	IP GRADE	SD TYPE	CABLE	CABLE GLAND
2	NP1	P0903	ES	EM'CY STOP FOR E/R PART FANS(ES-1)	IP 44	A2	FMC-12	NOT USE
	NP2	P0904	ES	EM'CY STOP FOR L.O/F.O/D.O/SLUDGE/BILGE PUMPS (ES-2)	IP 44	A2-1	FMC-12	

PROJECT No.	S5130	TITLE	EM'CY PUSH BUTTON BOX
	HME	SHEET No.	EPB13

0	1	2	3	4	5
6	7	8	9	10	11

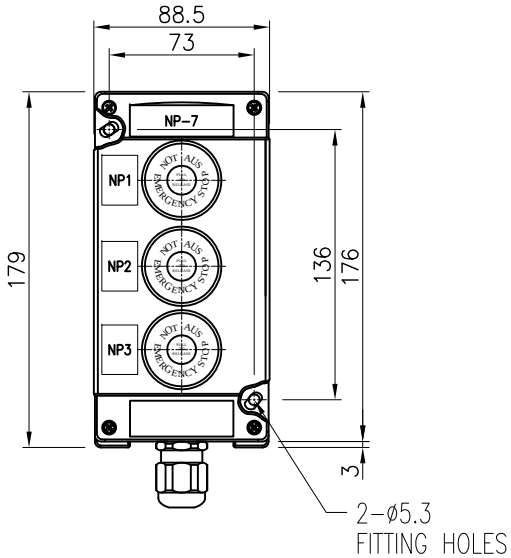

FRONT VIEW

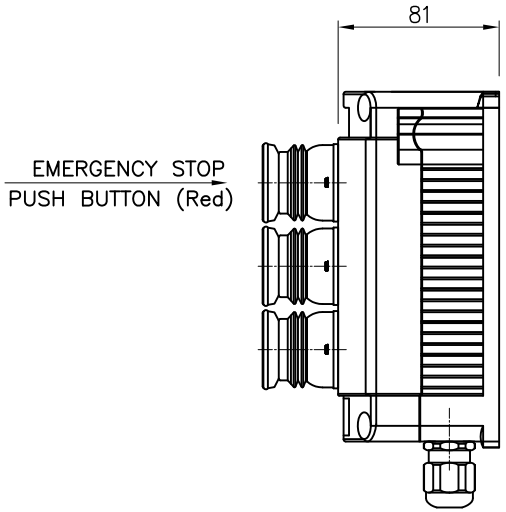

SIDE VIEW

SCHEMATIC DIAGRAM (SD)

TYPE : A1

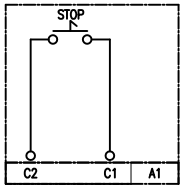

TYPE : A2

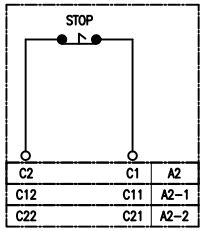

- NOTE -

1. COLOR : BLOCK
2. IP : EExd IIB T4
3. WEIGHT : 3.0 Kg
4. Q'TY : 2EA

NO.	POSI	CIRC NO.	NP TYPE	NAME PLATE	IP GRADE	SD TYPE	CABLE	CABLE GLAND
3	NP1	P7215 (PORT)	PC	SLUDGE PUMP	EExd IIB T4	A2	FMC-7	G:20B
	NP2		PC	SEWAGE TREATMENT CON. PANEL	EExd IIB T4	A2-1		
	NP3		PC	OILY WATER SEP. CON. PANEL	EExd IIB T4	A2-2		
4	NP1	P7216 (ST'BD)	PC	SLUDGE PUMP	EExd IIB T4	A2	FMC-7	G:20B
	NP2		PC	SEWAGE TREATMENT CON. PANEL	EExd IIB T4	A2-1		
	NP3		PC	OILY WATER SEP. CON. PANEL	EExd IIB T4	A2-2		

PROJECT No. S5130		TITLE	EM'CY PUSH BUTTON BOX
HME		SHEET No.	EPB14

0	1	2	3	4	5
6	7	8	9	10	11

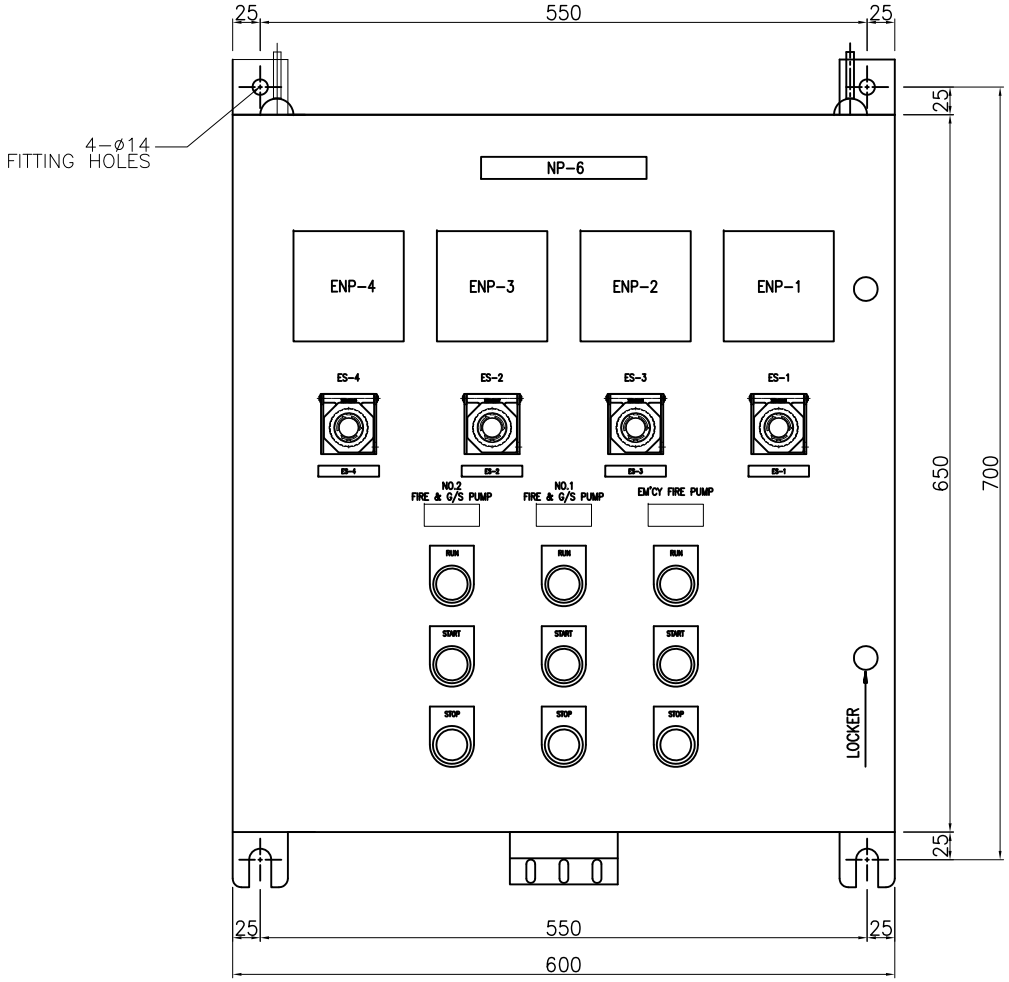

FRONT VIEW

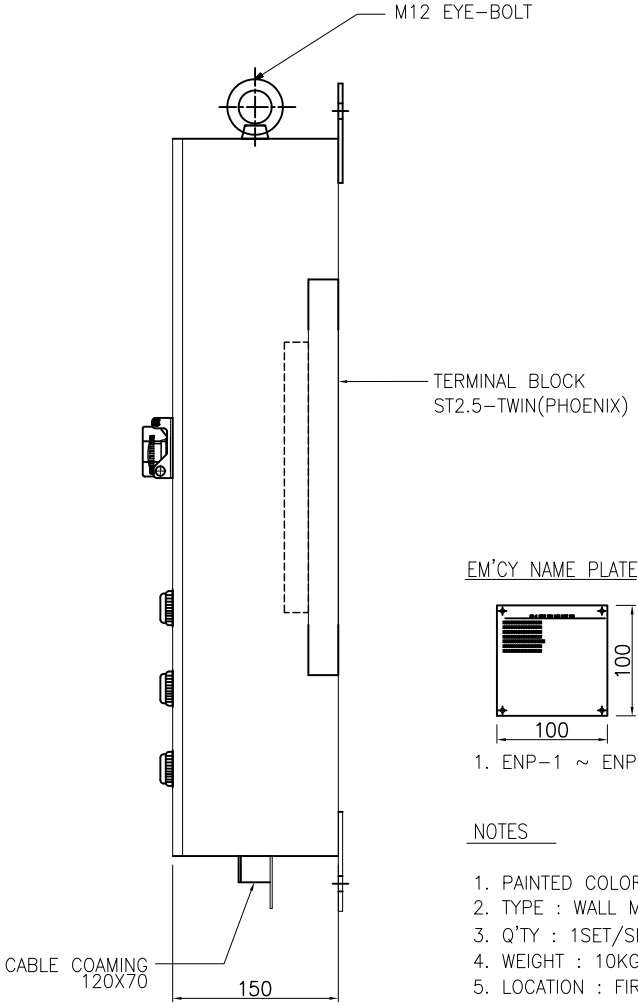

SIDE VIEW

EM'CY NAME PLATE

1. ENP-1 ~ ENP-4

NOTES

1. PAINTED COLOR : RED(5RA4/13)
2. TYPE : WALL MOUNTING TYPE
3. Q'TY : 1SET/SHIP
4. WEIGHT : 10KG
5. LOCATION : FIRE CONTROL STATION
6. PUSH BUTTON SW. : KPB25ER-R04
7. IP44
8. START : KH-2201-11G
9. STOP : KH-2201-11R
9. RUN : KH-2203-TLG(24V)

0	1	2	3	4	5						
6	7	8	9	10	11						

PROJECT No.	S5130	TITLE	EM'CY STOP PUSH BUTTON BOX
HME		SHEET No.	EPB15

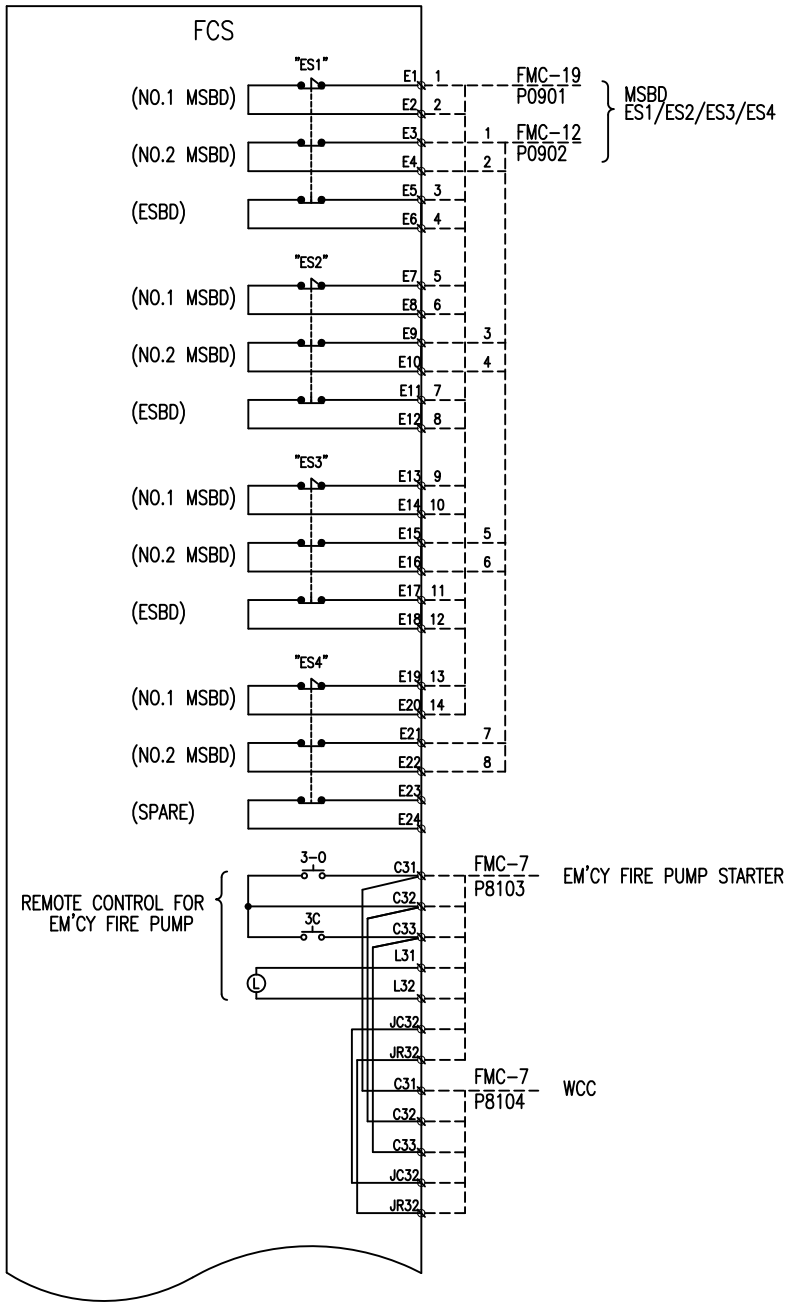

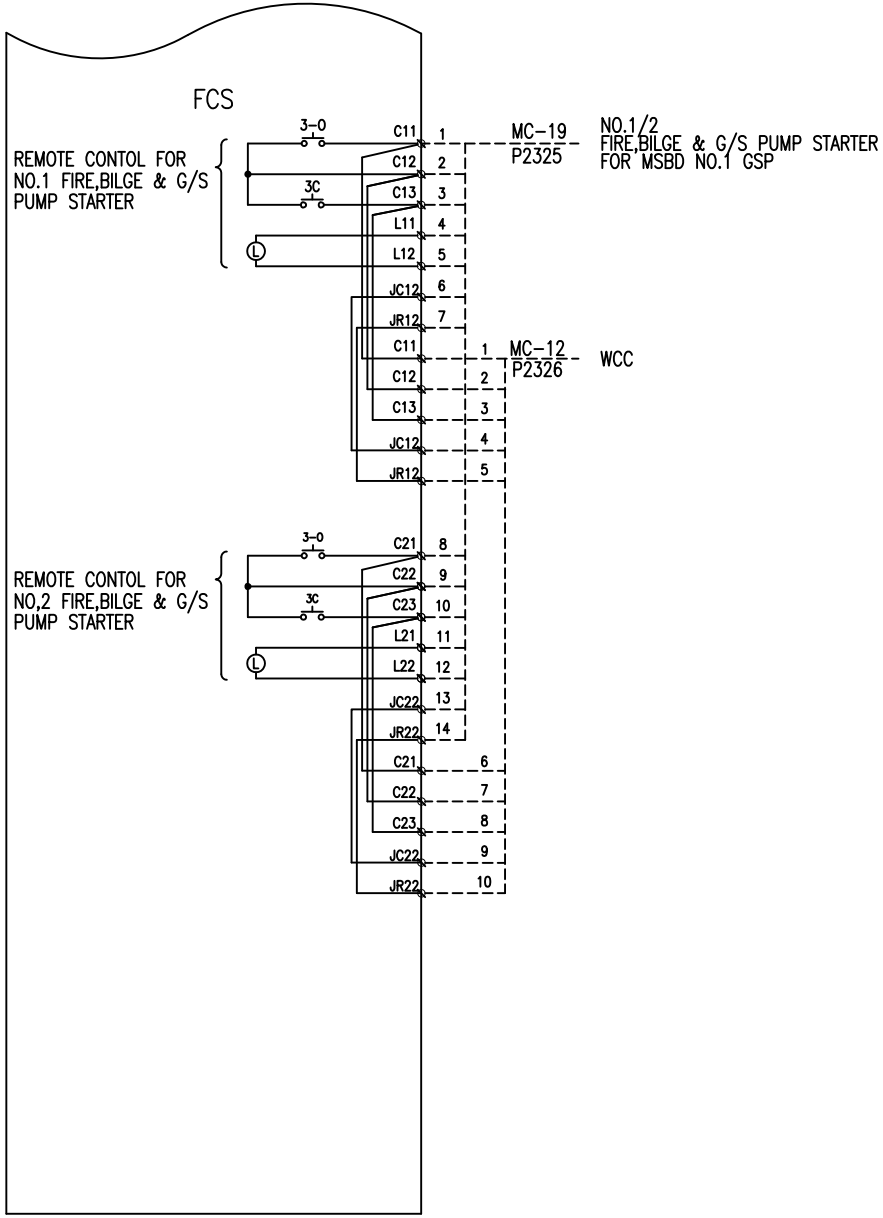

PROJECT No.	S5130	TITLE	PUSH BUTTON BOX
	HME	SHEET No.	ESSD1

0	1	2	3	4	5
6	7	8	9	10	11

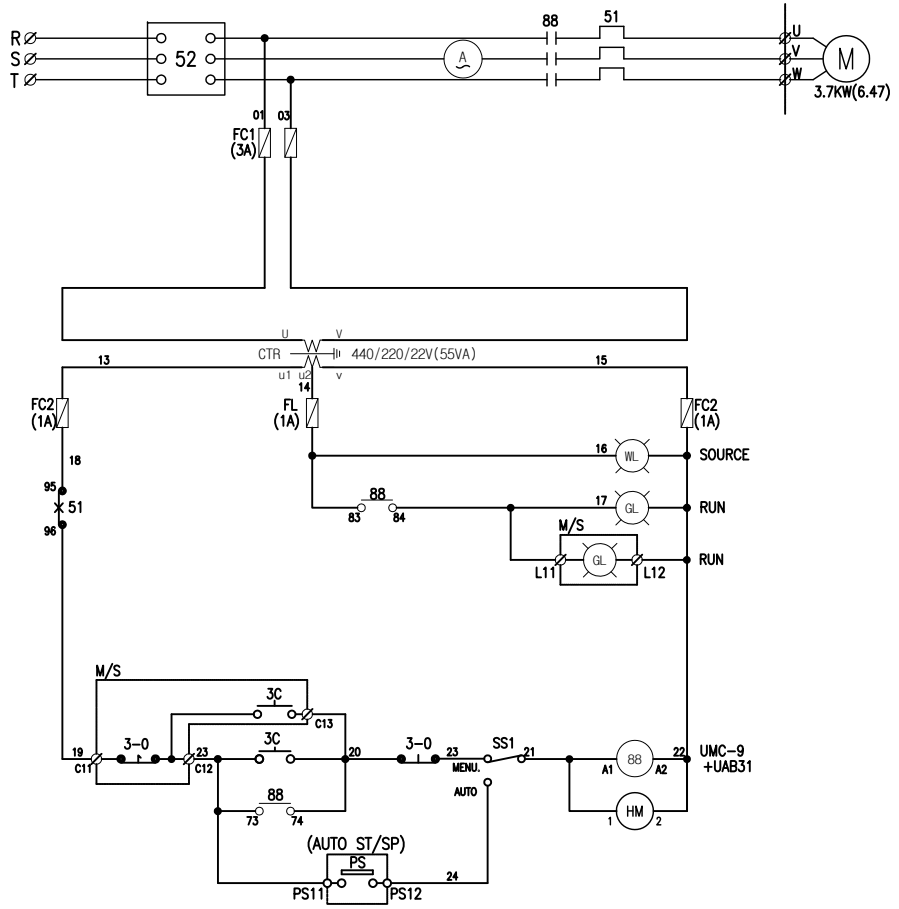

C11	C12	C13	L11	L12
RPB(START/STOP/RUN)				
MC-12				
P6802				

PS11	PS12
P.S	
MC-2	
P6702	

U	V	W
MOTOR		
T-2		
P6701		

R	S	T
SOURCE		
T-10		
P1401		

CIR. NO.	P6701
PROJECT NO. S5130	TITLE NO.1 F.W HYD. PUMP
HME	SHEET NO. SD101

0	1	2	3	4	5
6	7	8	9	10	11

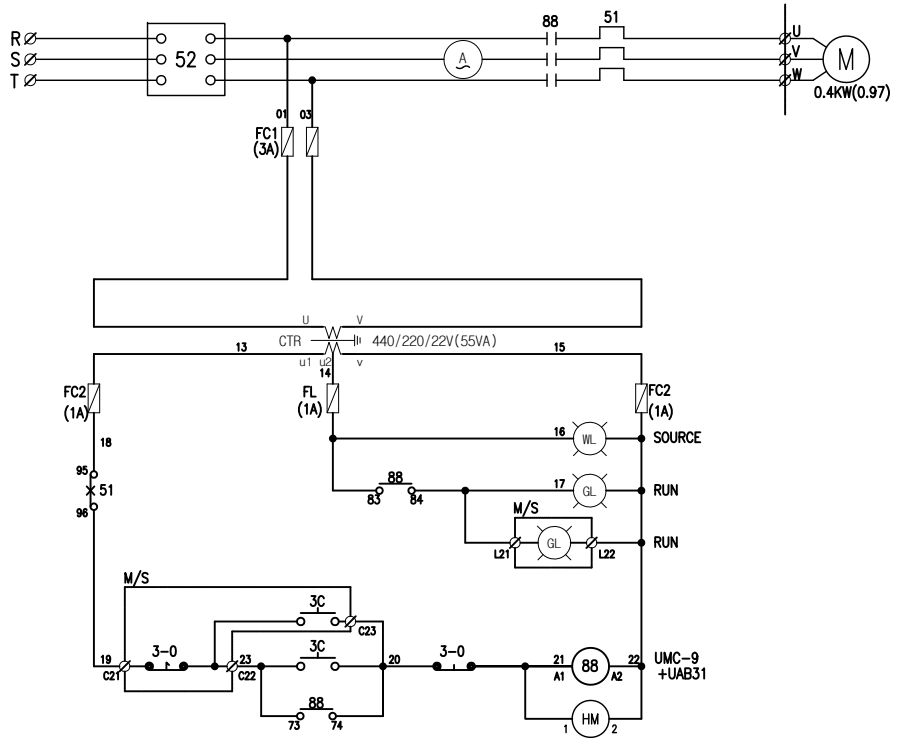

C21	C22	C23	L21	L22	U	V	W	R	S	T
RPB(START/STOP/RUN)					MOTOR			SOURCE		
MC-7					T-2			T-10		
P6712					P6711			P1401		

CIR. NO.	P6711
PROJECT NO. S5130	TITLE: HOT WATER CIRC. PUMP
HME	SHEET NO. SD102

0	1	2	3	4	5
6	7	8	9	10	11

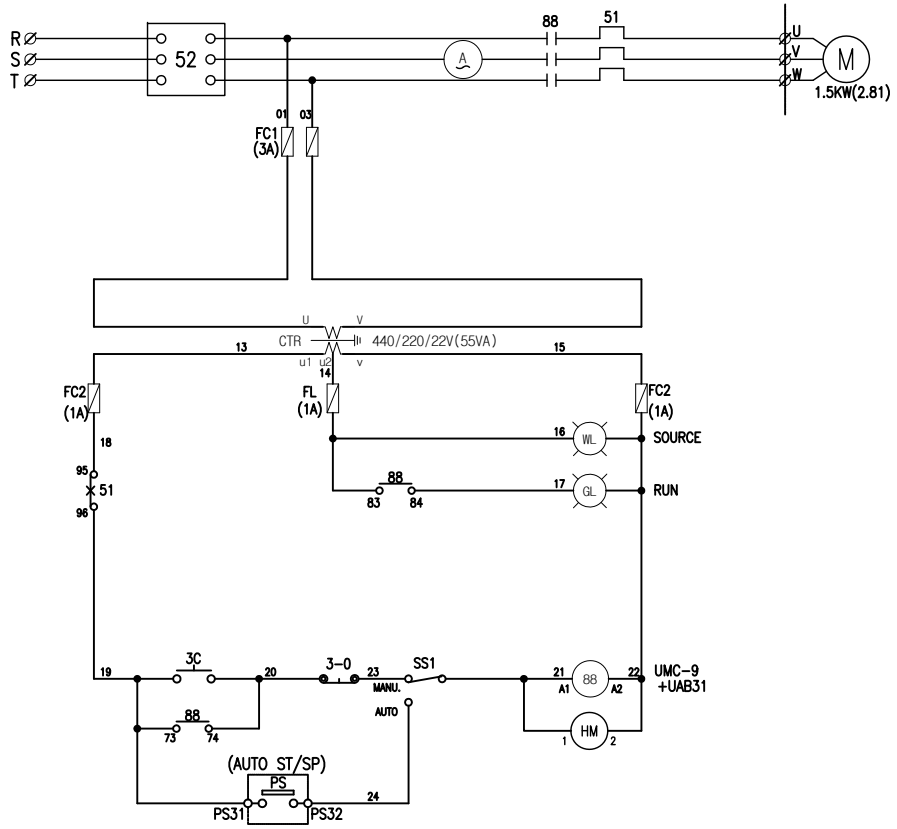

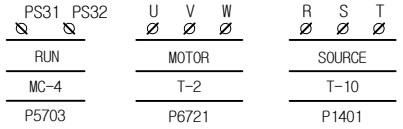

CIR. NO.	P6721
PROJECT NO. S5130	TITLE: F.W PUMP FOR W/H PACKAGE AIR CON.
HME	SHEET NO. SD103

0	1	2	3	4	5
6	7	8	9	10	11

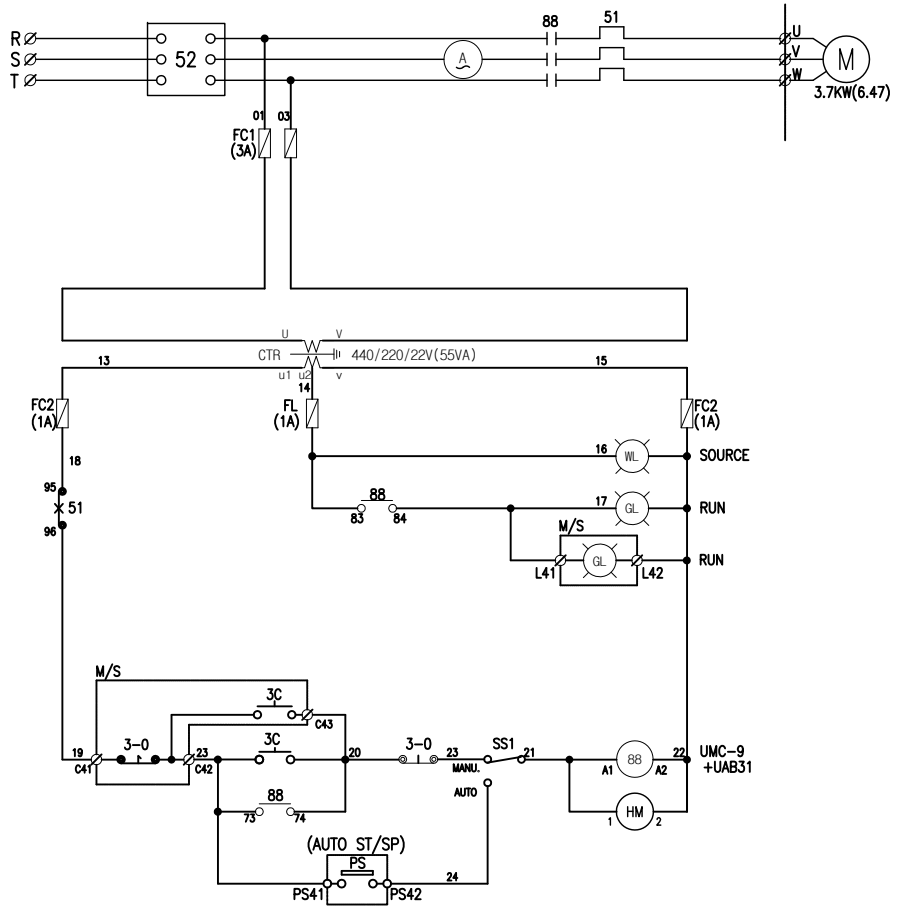

C41	C42	C43	L41	L42
RPB(START/STOP/RUN)				
MC-12				
P6812				

PS41	PS42
P.S	
MC-2	
P6732	

U	V	W
MOTOR		
T-2		
P6731		

R	S	T
SOURCE		
T-10		
P1401		

CIR. NO.	P6731
PROJECT NO. S5130	TITLE NO.1 D.W HYD. PUMP
HME	SHEET NO. SD104

0	1	2	3	4	5
6	7	8	9	10	11

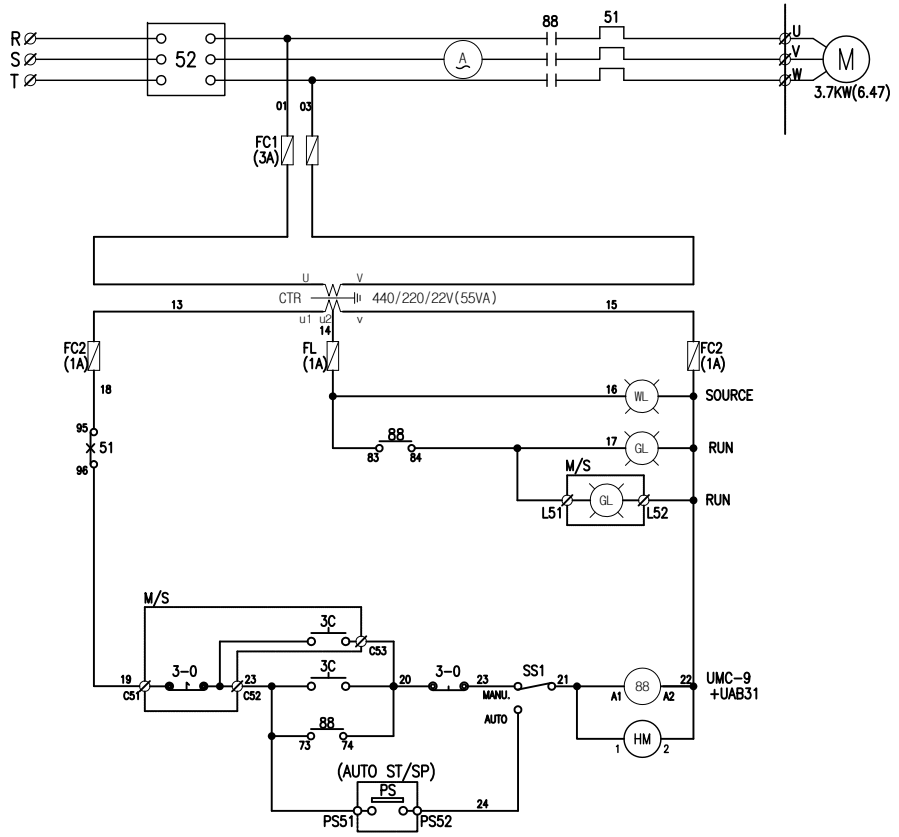

PS51 PS52	C51 C52 C53 L51 L52	U V W	R S T
P.S	RPB(START/STOP/RUN)	MOTOR	SOURCE
MC-2	MC-12	T-2	T-25
P6803	P6802	P6801	P1703

CIR. NO.	P6801
PROJECT NO. S5130	TITLE NO.2 F.W HYD. PUMP
HME	SHEET NO. SD105

0	1	2	3	4	5
6	7	8	9	10	11

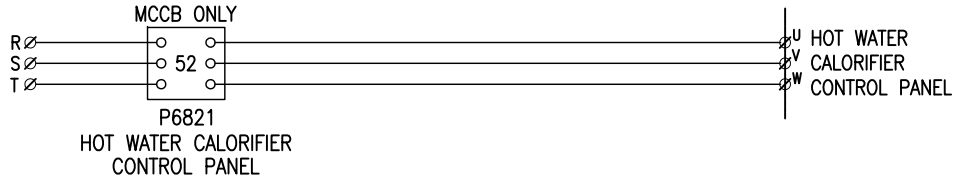

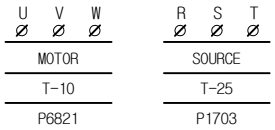

0	1	2	3	4	5						
6	7	8	9	10	11						

PROJECT NO.	S5130	TITLE	NO.1 LGSP MCCB ONLY
HME		SHEET NO.	SD106

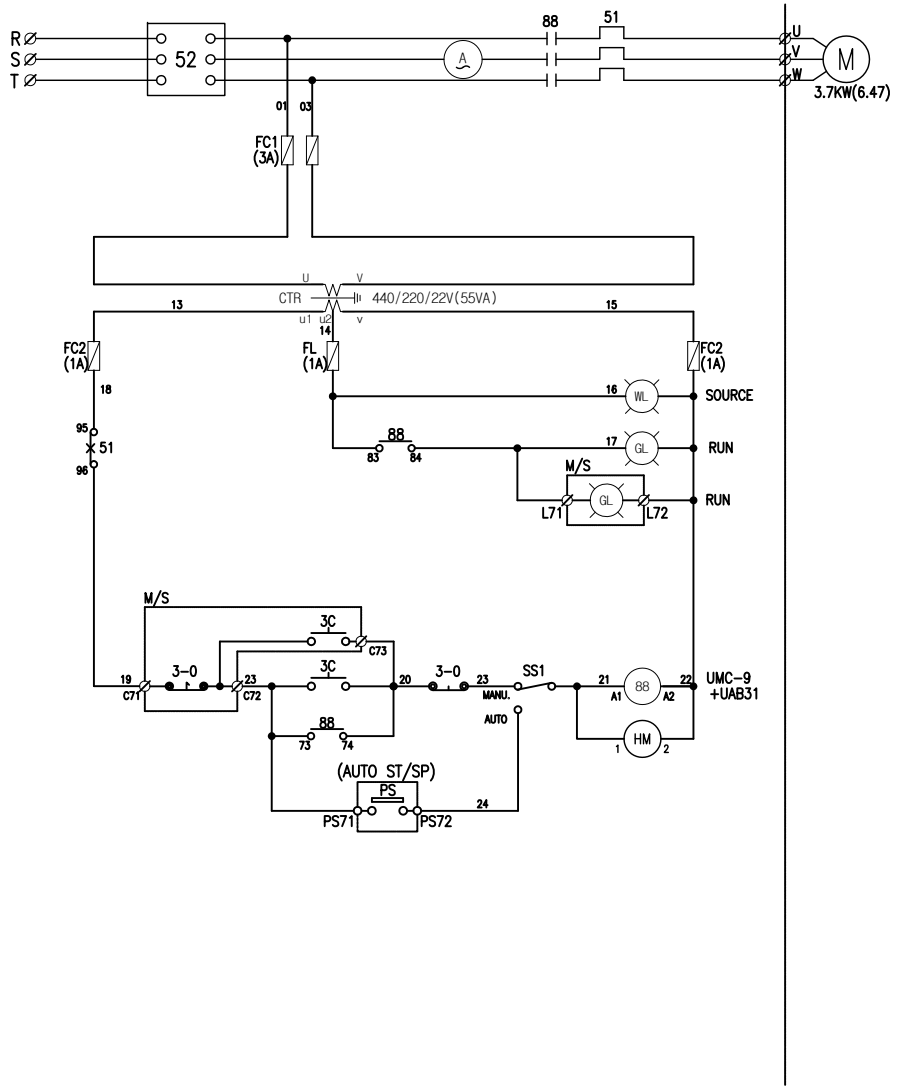

PS51 PS52	C71 C72 C73 L71 L72	U V W	R S T
P.S	RPB(START/STOP/RUN)	MOTOR	SOURCE
MC-2	MC-12	T-2	T-25
P6813	P6812	P6811	P1703

CIR. NO.	P6811
PROJECT NO. S5130	TITLE NO.2 D.W HYD. PUMP
HME	SHEET NO. SD107

0	1	2	3	4	5
6	7	8	9	10	11

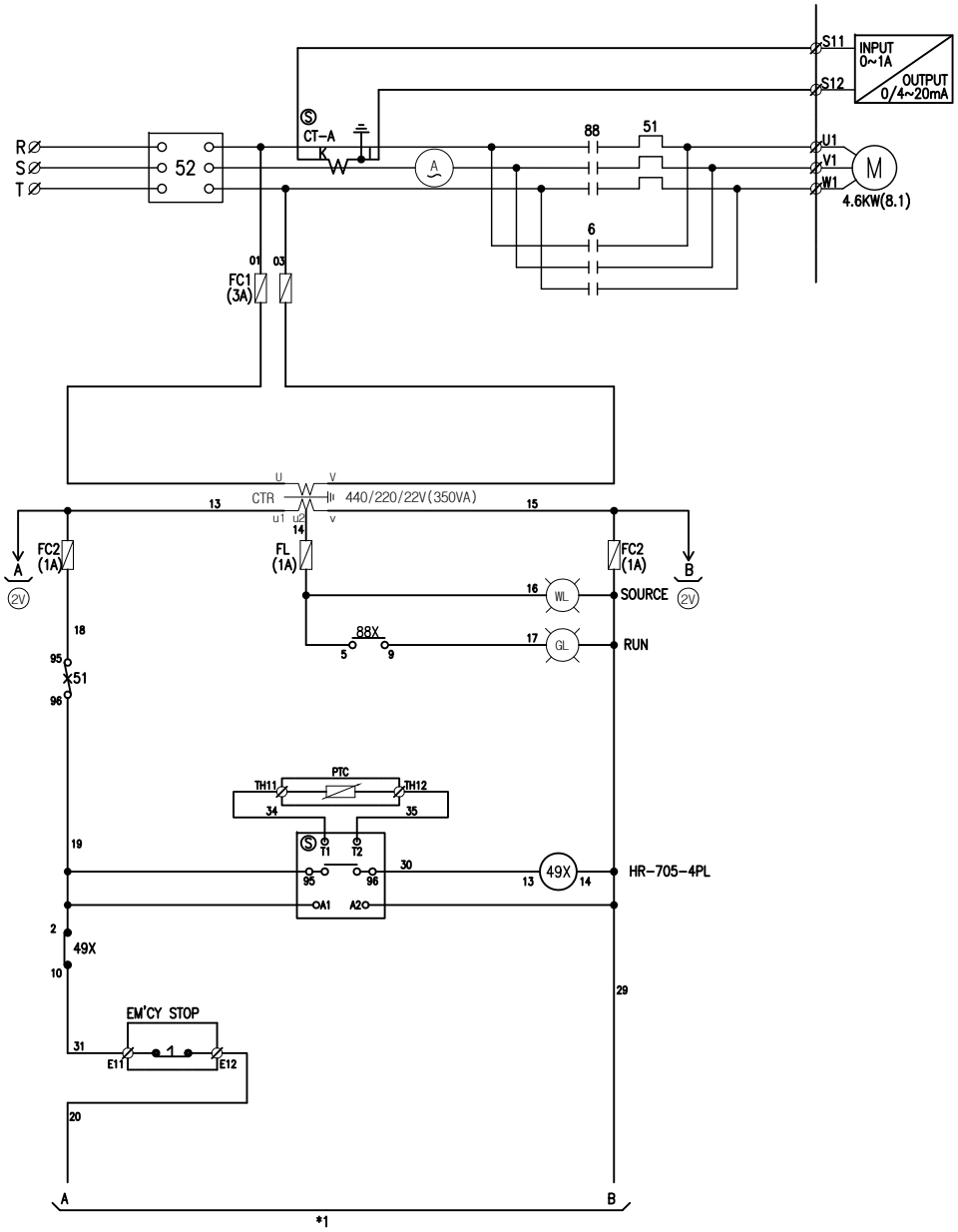

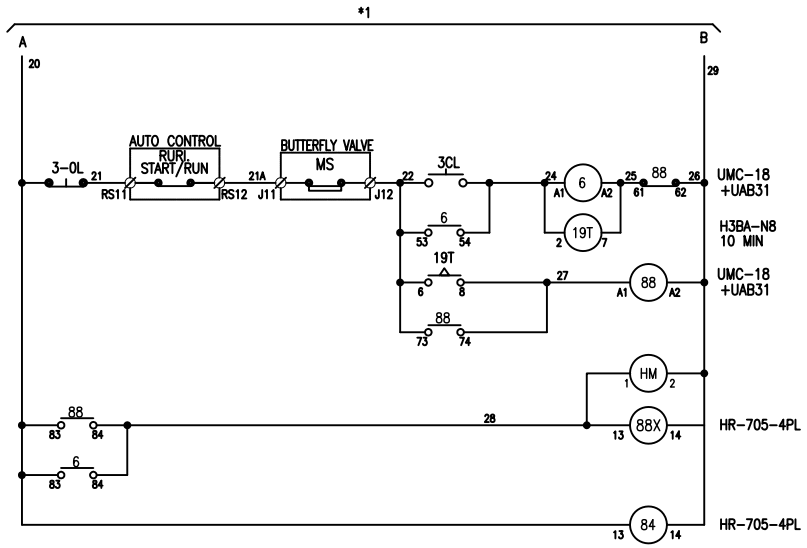

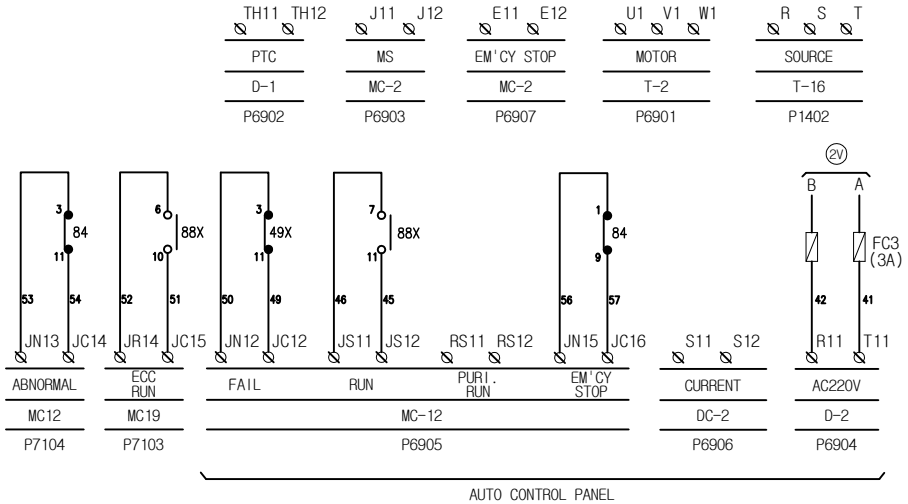

CIR. NO.	P6901
PROJECT NO. S5130	TITLE NO.1 H.F.O PURIFIER
HME	SHEET NO. SD201

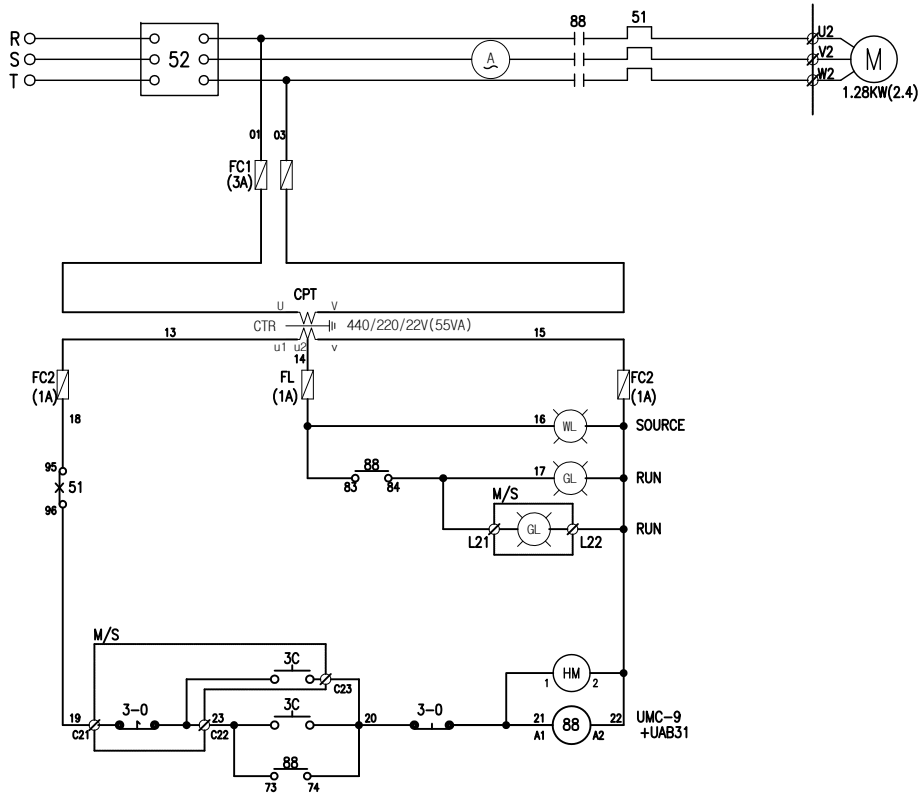

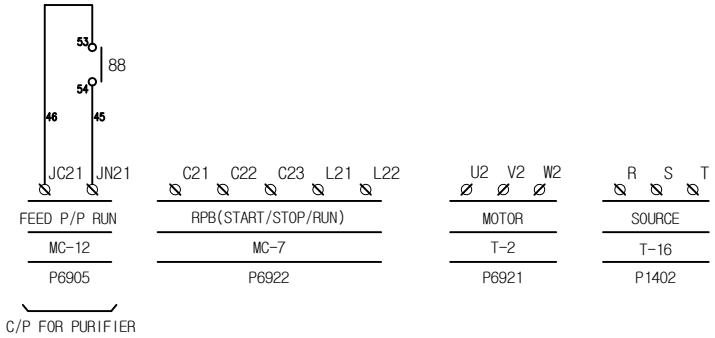

CIR. NO.	P6921
PROJECT NO. S5130	TITLE: NO.1 H.F.O PURIFIER SUP. PUMP
HME	SHEET NO. SD202

0	1	2	3	4	5
6	7	8	9	10	11

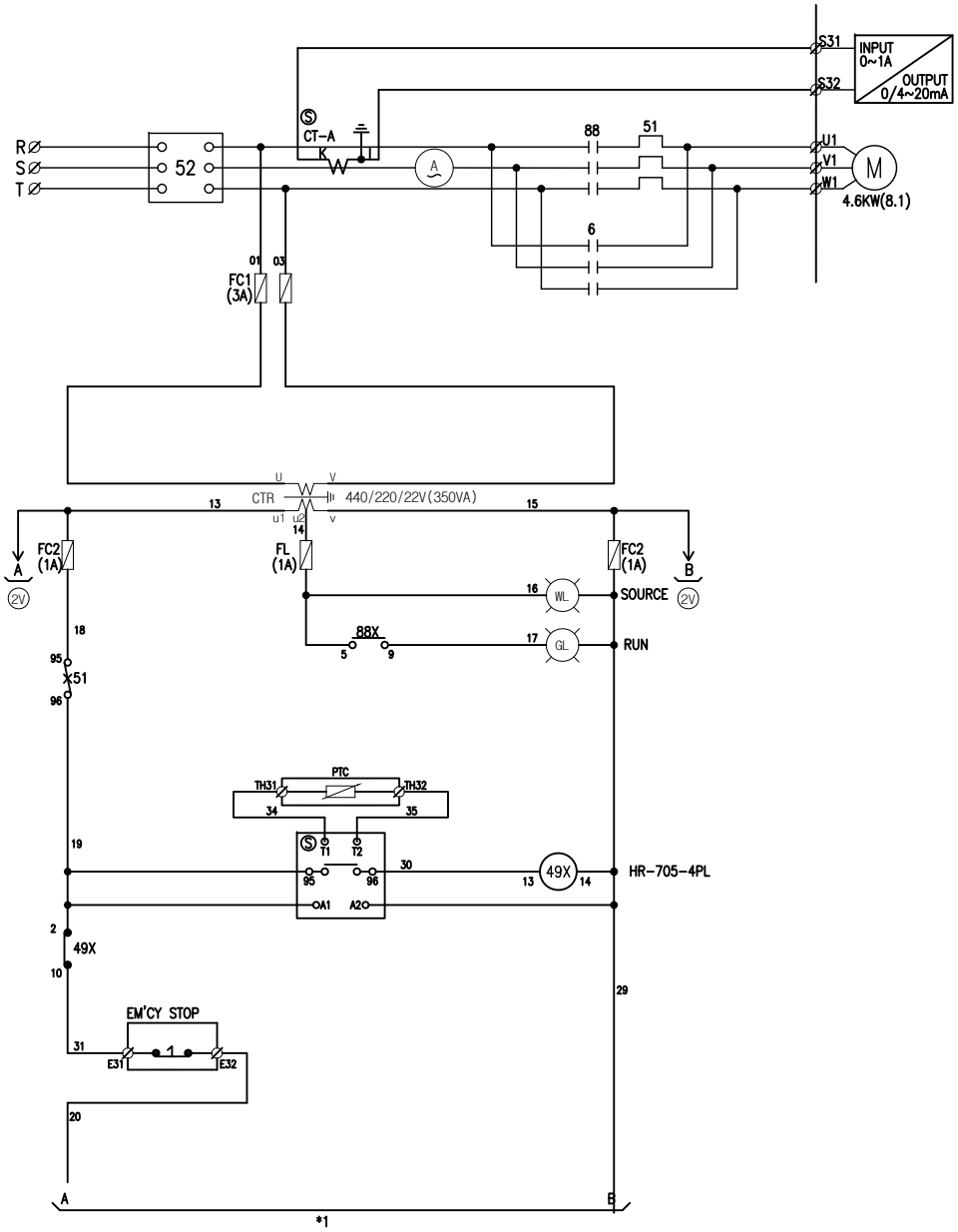

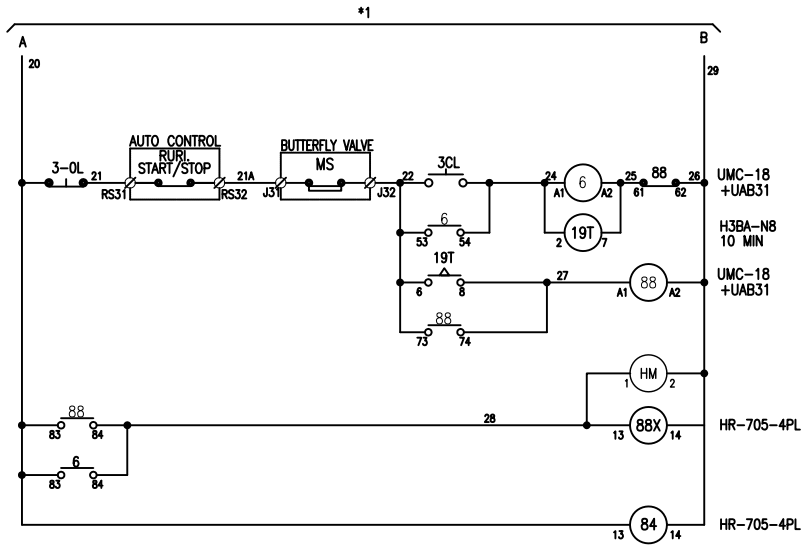

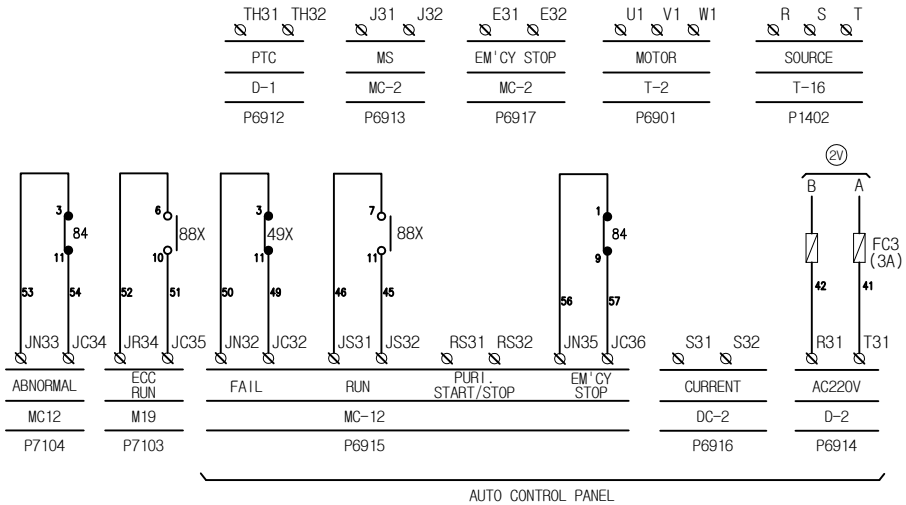

CIR. NO.	P6911
PROJECT NO. S5130	TITLE NO.1 L.O PURIFIER
HME	SHEET NO. SD203

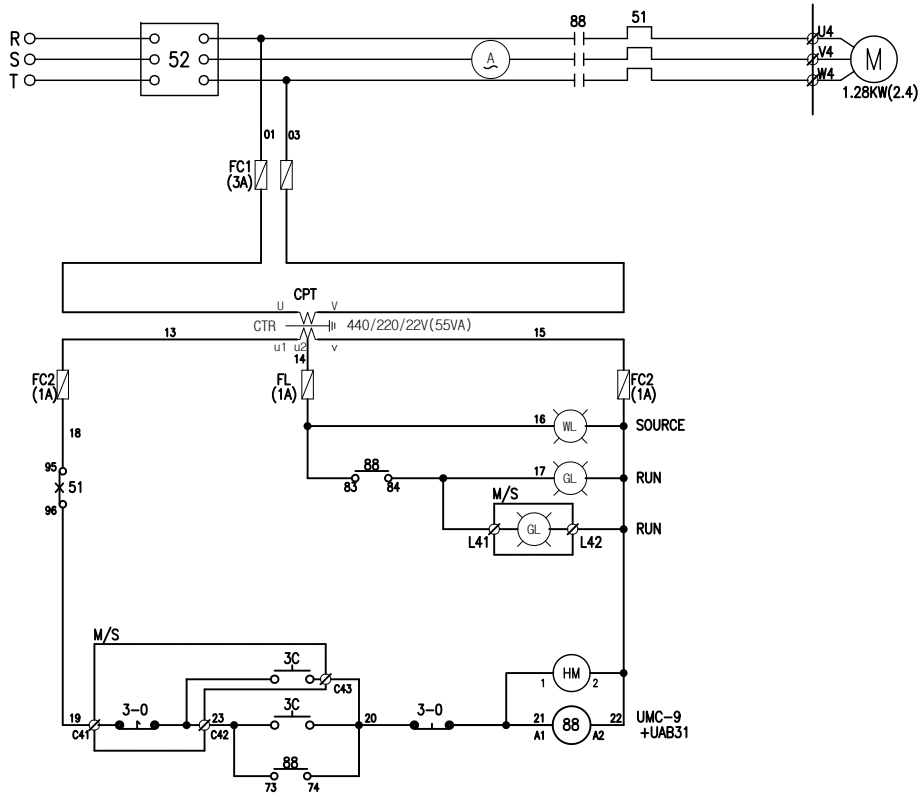

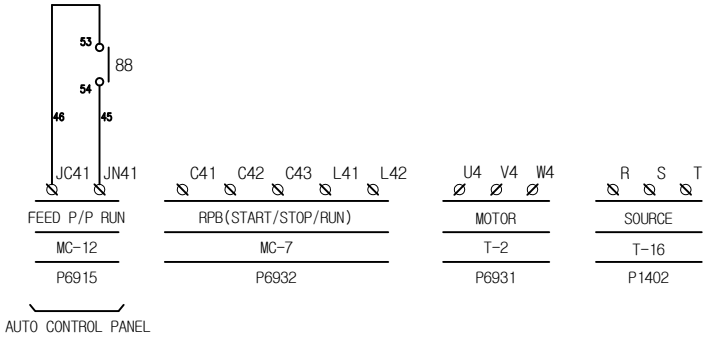

CIR. NO.	P6931
PROJECT NO. S5130	TITLE: NO.1 L.O PURIFIER SUP. PUMP
HME	SHEET NO. SD204

0	1	2	3	4	5
6	7	8	9	10	11

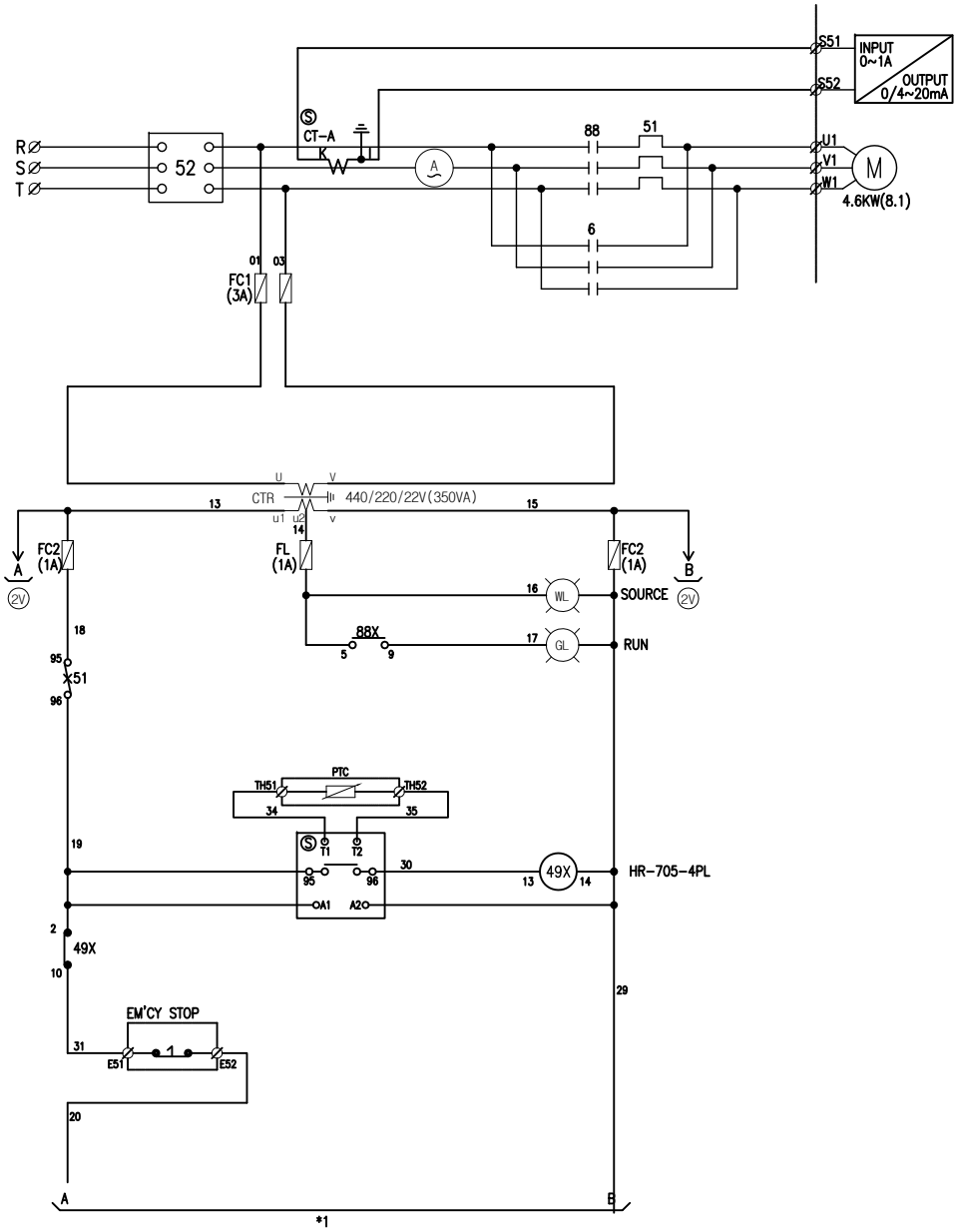

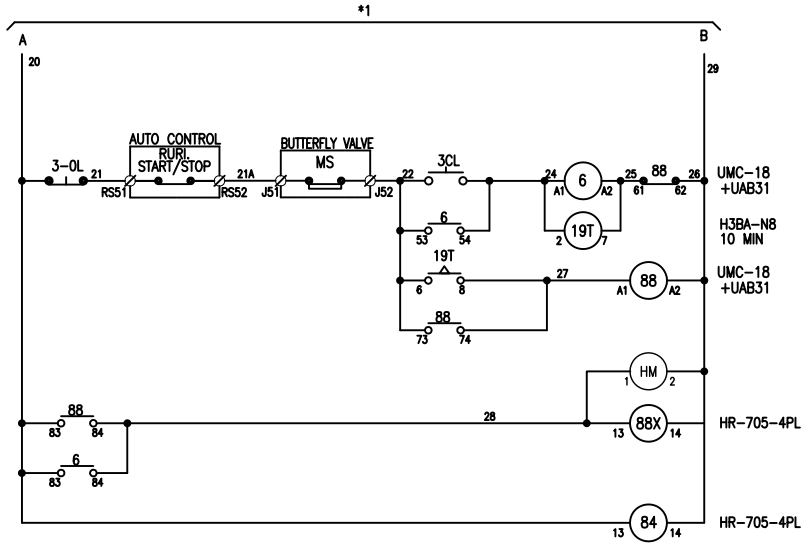

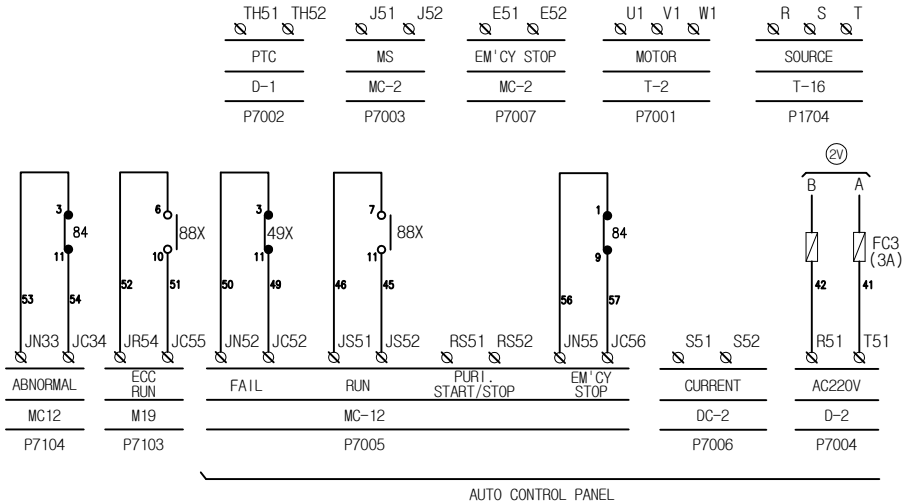

CIR. NO.	P7001
PROJECT NO. S5130	TITLE: NO.2 H.F.O PURIFIER
HME	SHEET NO. SD205

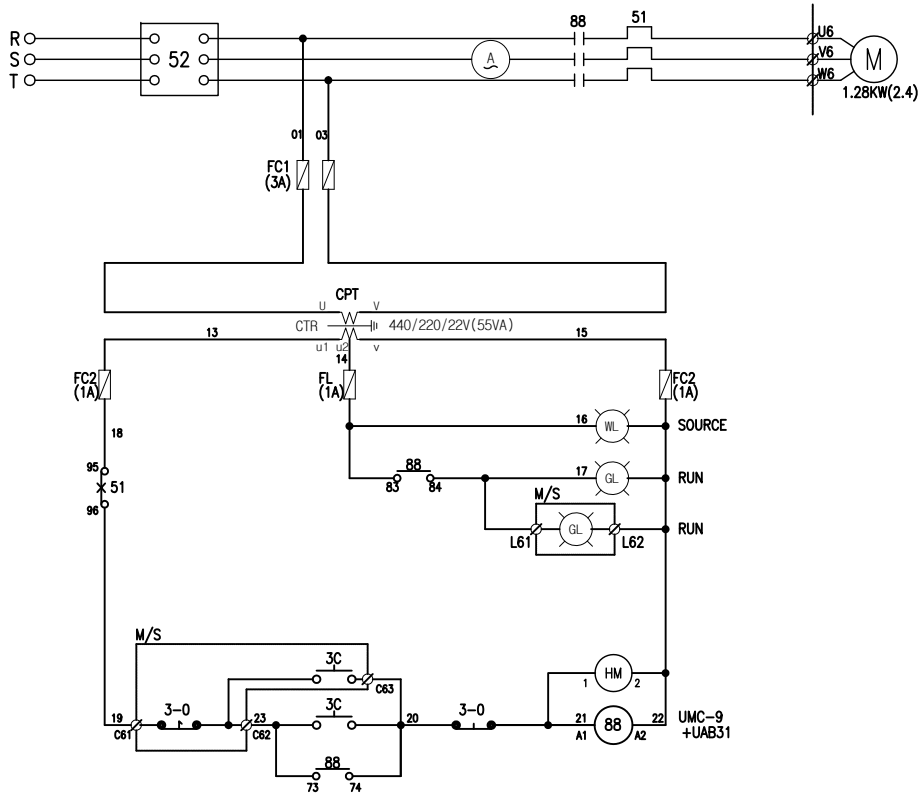

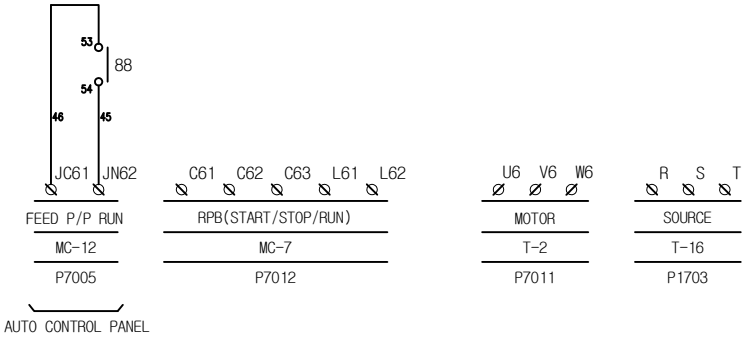

0	1	2	3	4	5						
6	7	8	9	10	11						

	CIR. NO.	P7021
PROJECT NO. S5130	TITLE	NO.2 H.F.O PURI. SUP. PUMP
HME	SHEET NO.	SD206

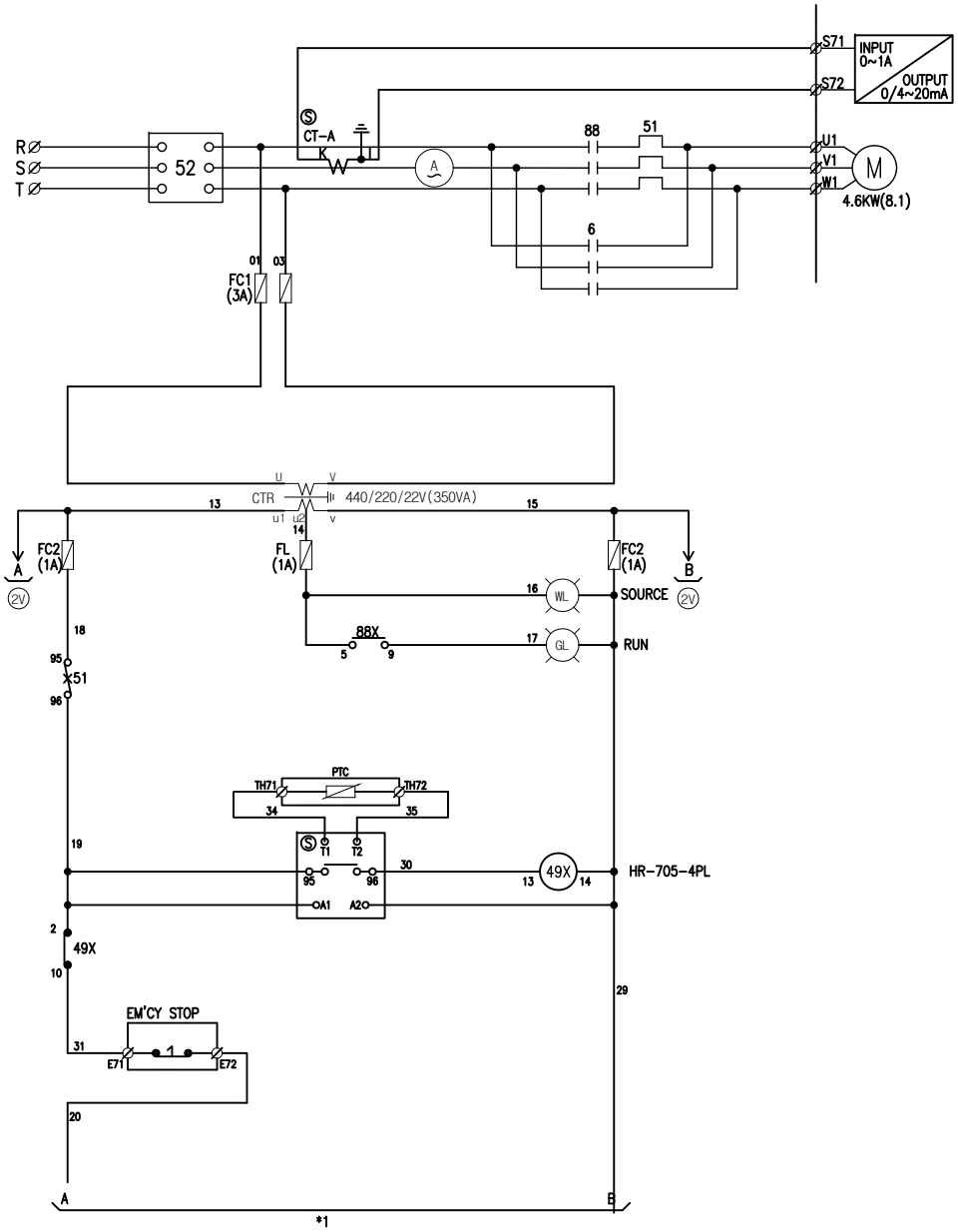

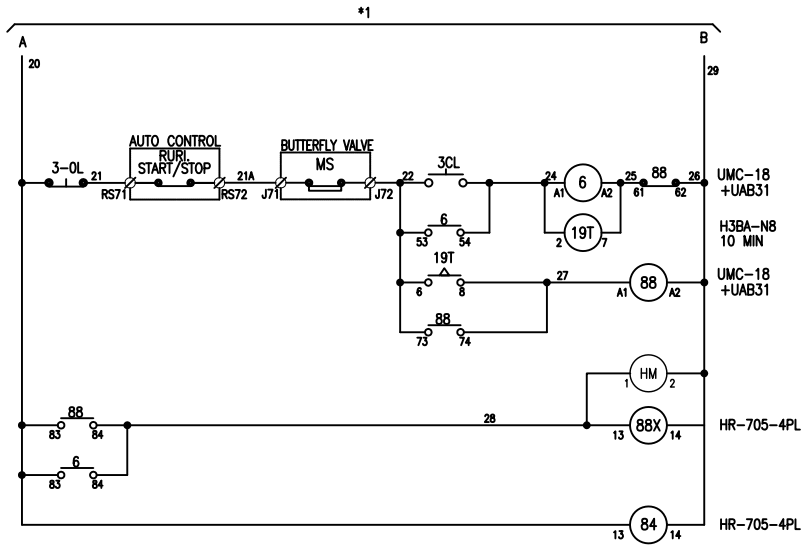

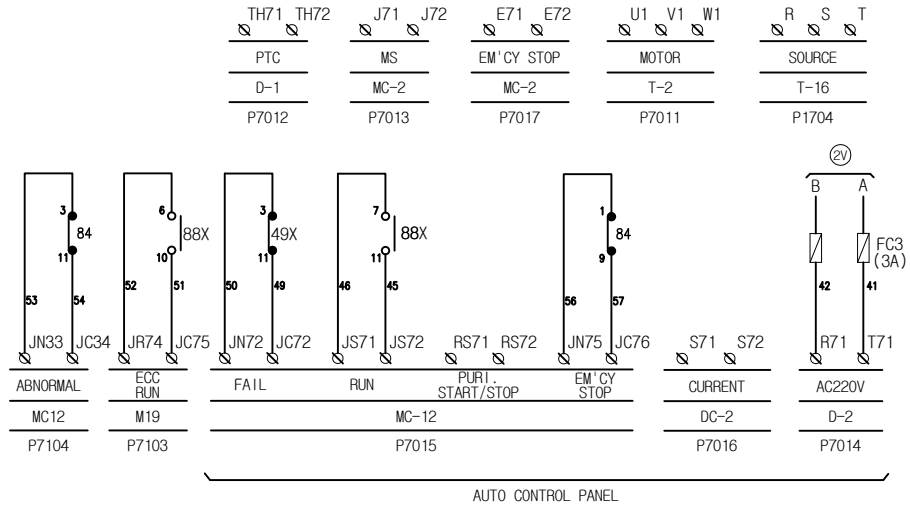

CIR. NO.	P7011
PROJECT NO. S5130	TITLE NO.2 L.O PURIFIER
HME	SHEET NO. SD207

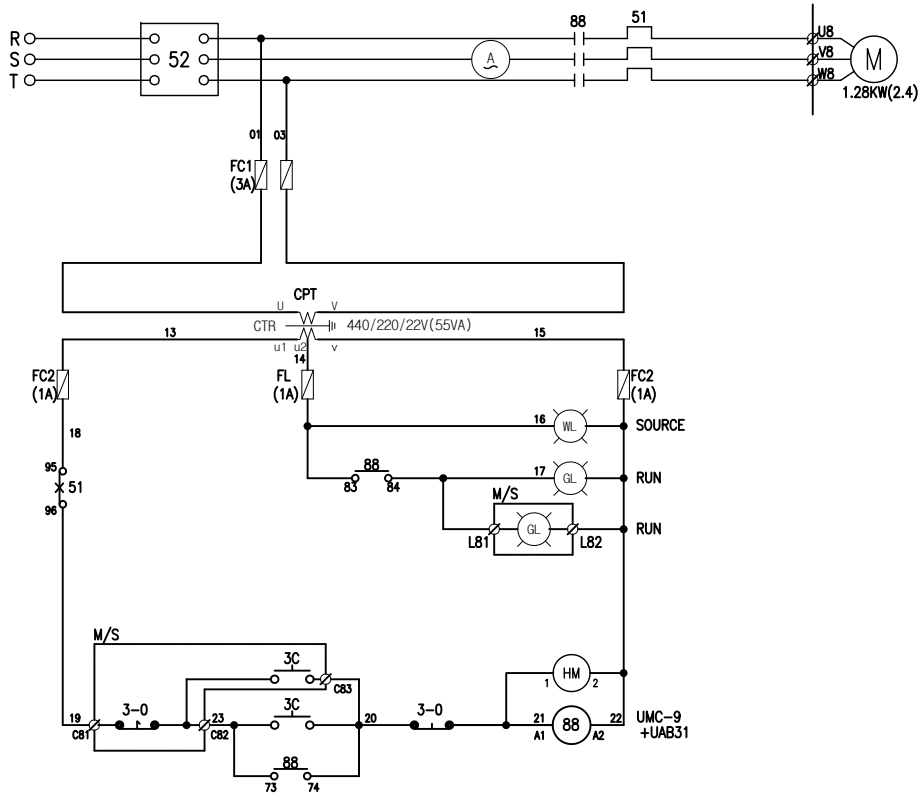

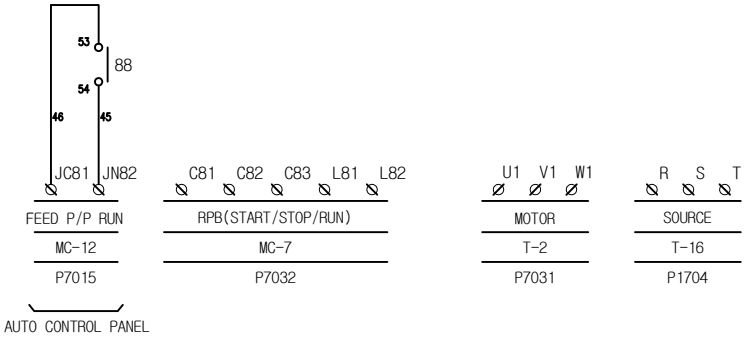

CIR. NO.	P7031
PROJECT NO. S5130	TITLE: NO.2 L.O PURIFIER SUP. PUMP
HME	SHEET NO. SD208

0	1	2	3	4	5
6	7	8	9	10	11

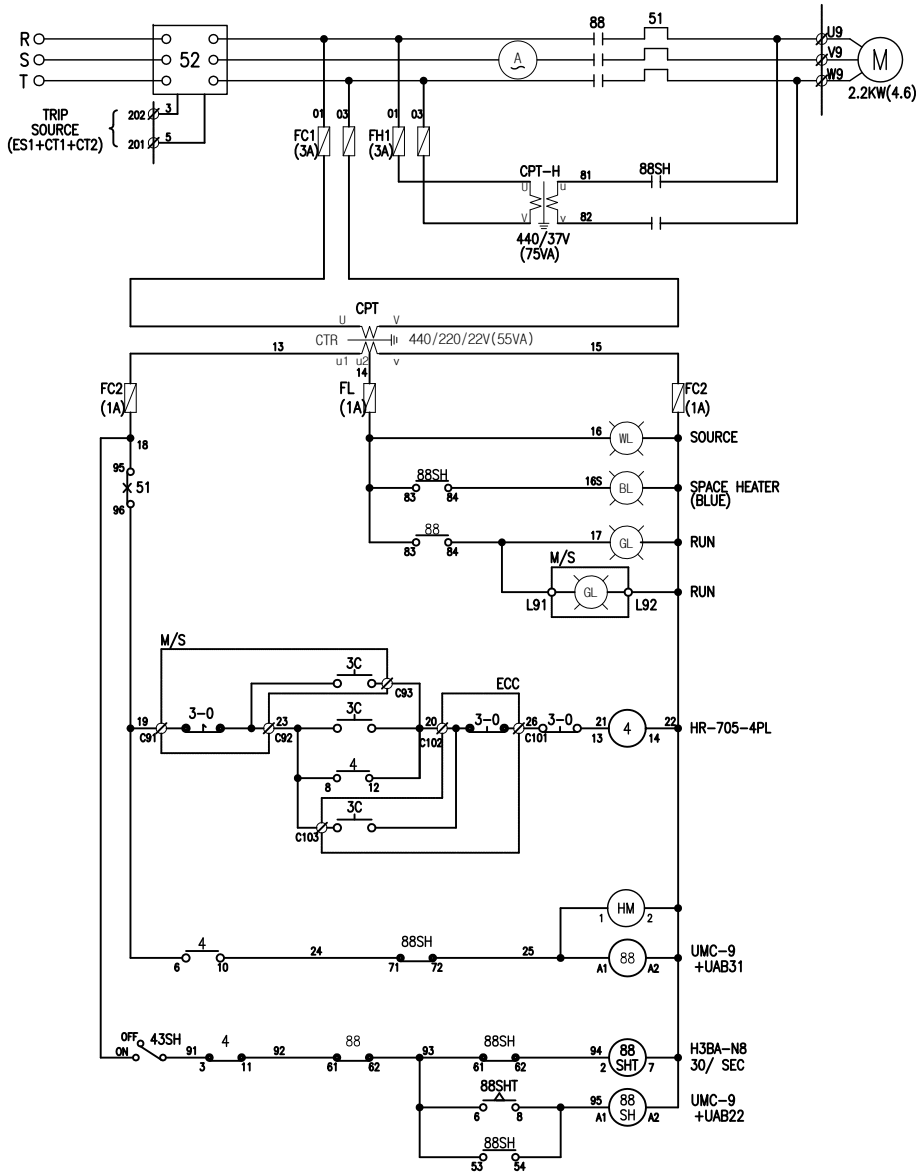

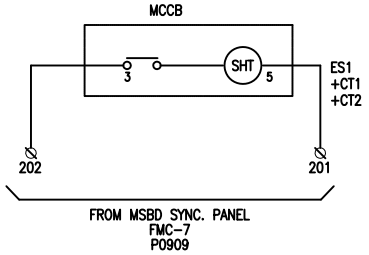

P7101
PURIFIER ROOM EXH. FAN

- NOTE -

*CT1,CT2 : CO2 TRIP

*ES-1 : EM'CY STOP FOR E/R PART FAN

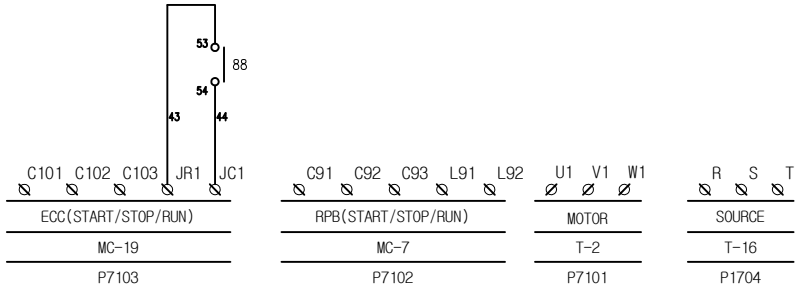

CIR. NO.	P7101
TITLE	PURIFIER ROOM EXH. FAN
SHEET NO.	SD209

PROJECT NO. S5130

HME

0	1	2	3	4	5
6	7	8	9	10	11

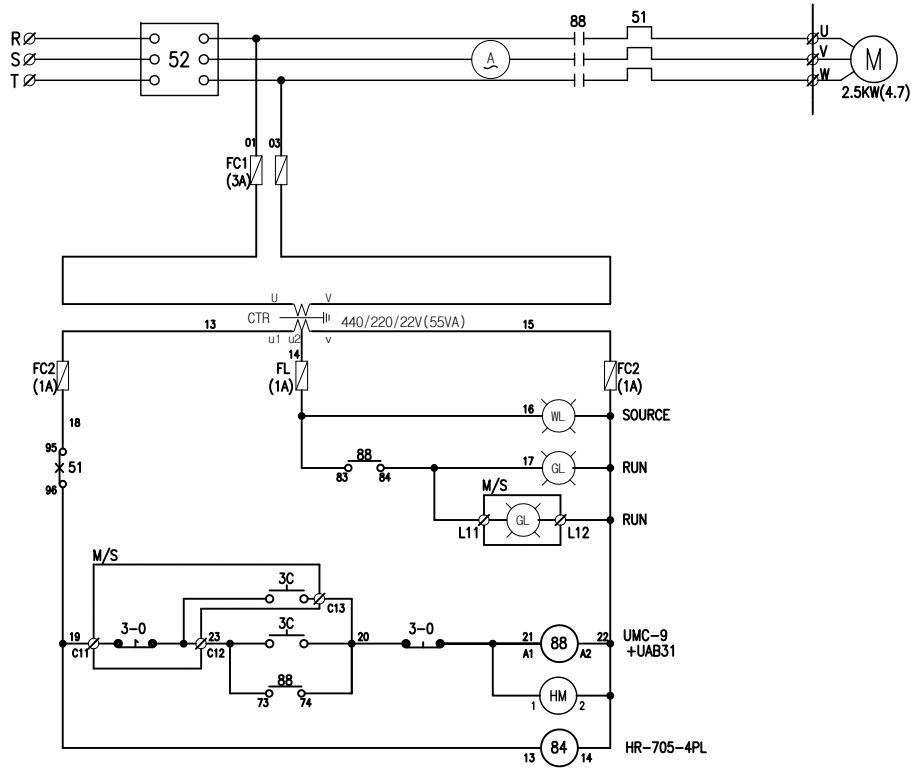

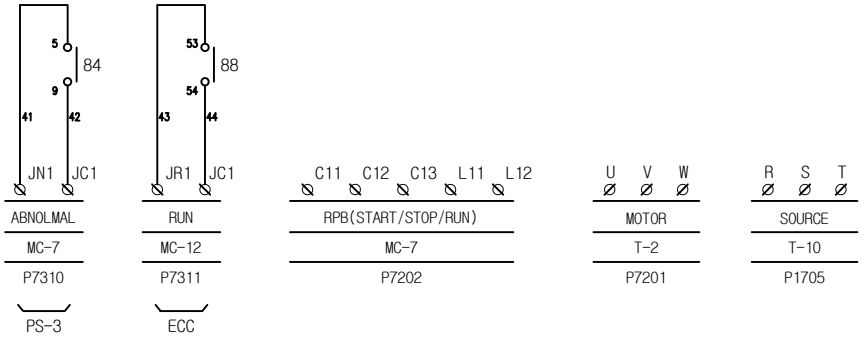

0	1	2	3	4	5						
6	7	8	9	10	11						

CIR. NO.	P7201
PROJECT NO. S5130	TITLE: L.O TRANS. PUMP
HME	SHEET NO. SD301

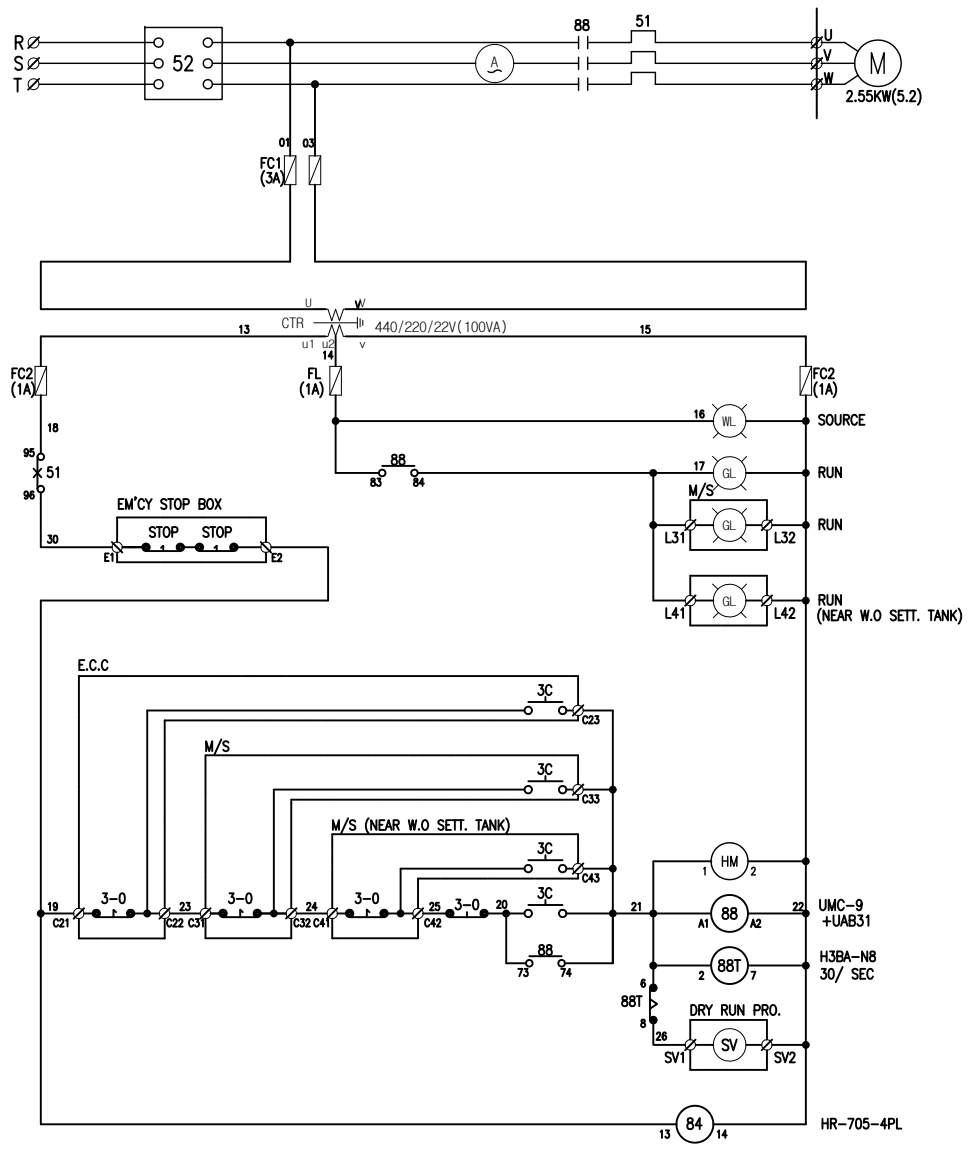

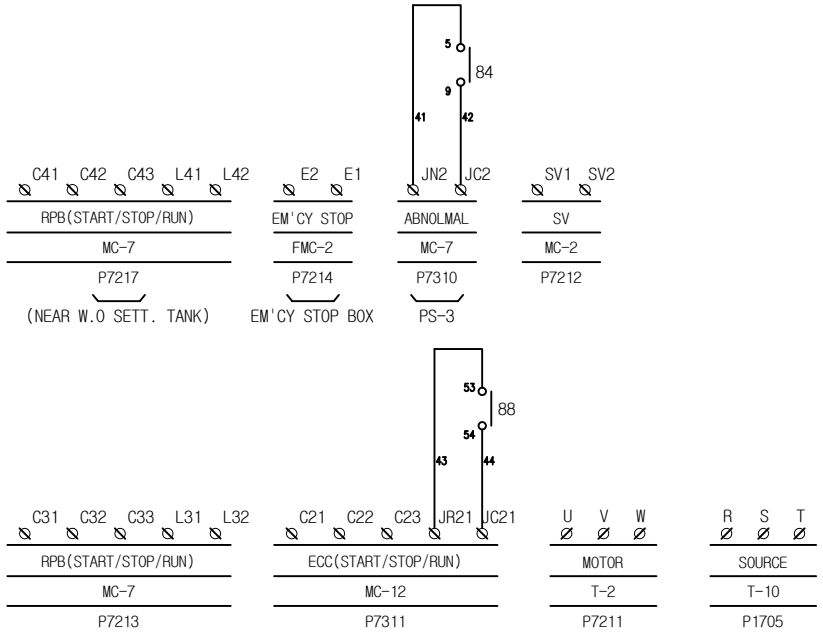

0	1	2	3	4	5						
6	7	8	9	10	11						

CIR. NO.	P7211
PROJECT NO. S5130	TITLE: SLUDGE PUMP
HME	SHEET NO. SD302

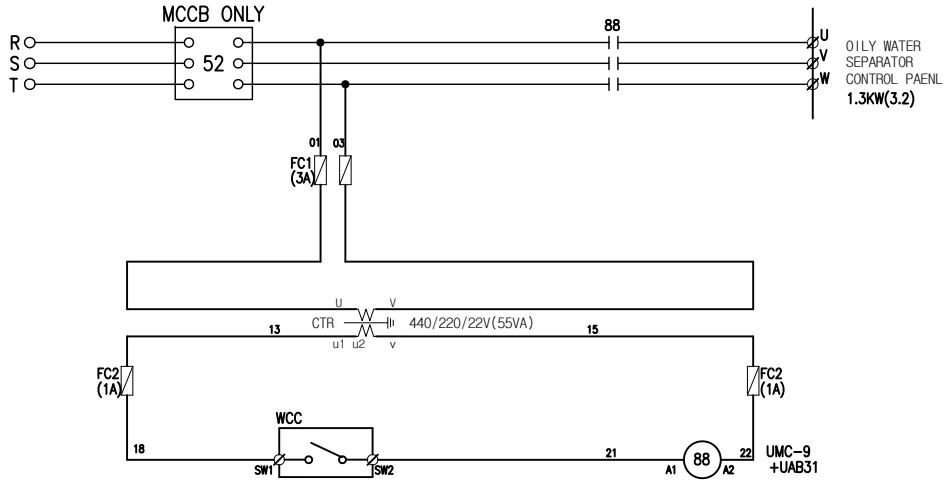

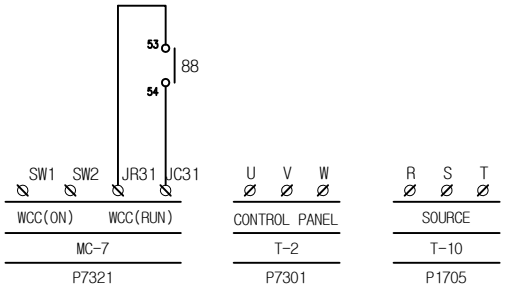

CIR. NO.	P7301
PROJECT NO. S5130	TITLE: OILY WATER SEPARATOR CONTROL PAENL
HME	SHEET NO. SD303

0	1	2	3	4	5
6	7	8	9	10	11

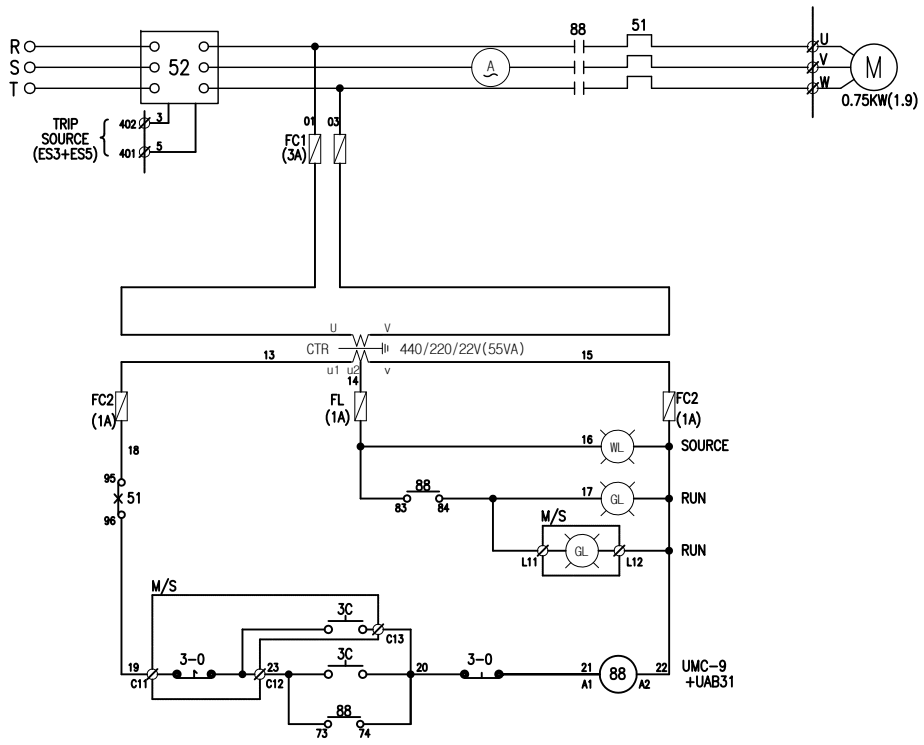

C11	C12	C13	L11	L12
RPB(START/STOP/RUN)				
MC-12				
P7402				

U	V	W
MOTOR		
T-2		
P7401		

R	S	T
SOURCE		
T-10		
P1403		

CIR. NO.	P7401
PROJECT NO. S5130	TITLE GALLEY EXH. FAN
HME	SHEET NO. SD401

0	1	2	3	4	5
6	7	8	9	10	11

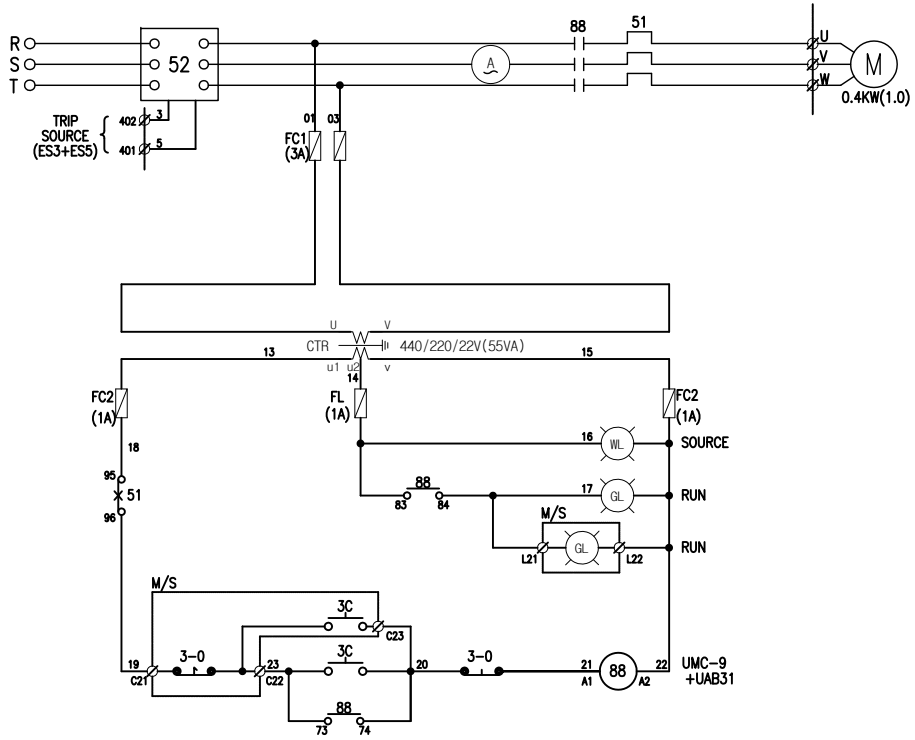

C21	C22	C23	L21	L22
RPB(START/STOP/RUN)				
MC-12				
P7402				

U	V	W
MOTOR		
T-2		
P7411		

R	S	T
SOURCE		
T-10		
P1403		

CIR. NO.	P7411
PROJECT NO. S5130	TITLE GALLEY SUP. FAN
HME	SHEET NO. SD402

0	1	2	3	4	5
6	7	8	9	10	11

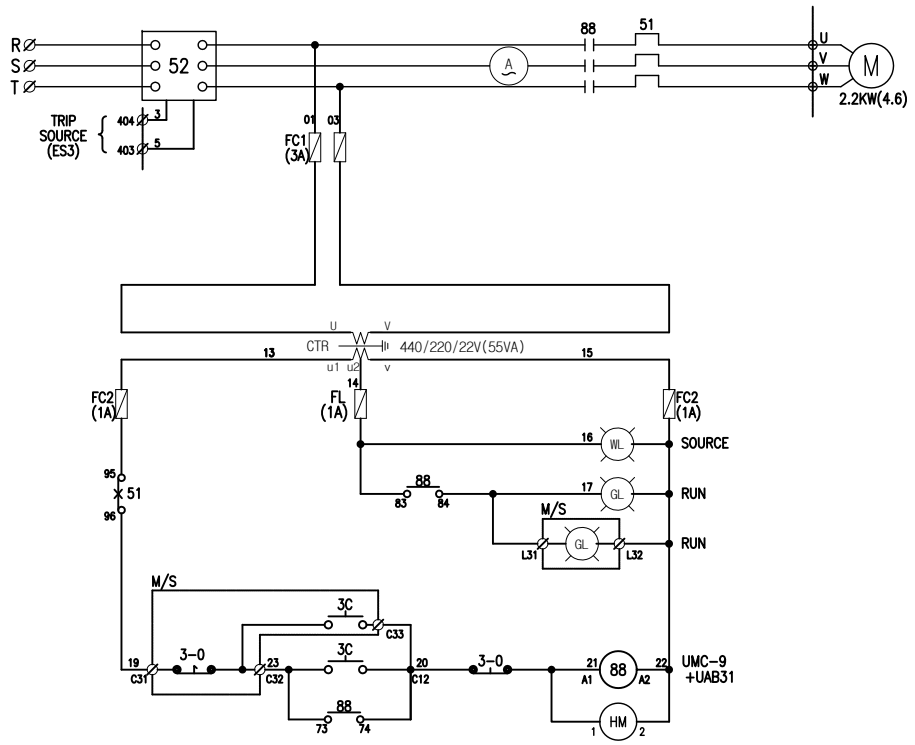

C31	C32	C33	L31	L32
RPB(START/STOP/RUN)				
MC-7				
P7422				

U	V	W
MOTOR		
T-2		
P7421		

R	S	T
SOURCE		
T-10		
P1403		

0	1	2	3	4	5
6	7	8	9	10	11

	CIR. NO.	P7421
PROJECT NO. S5130	TITLE	SANITARY SPACE EXH. FAN
HME	SHEET NO.	SD403

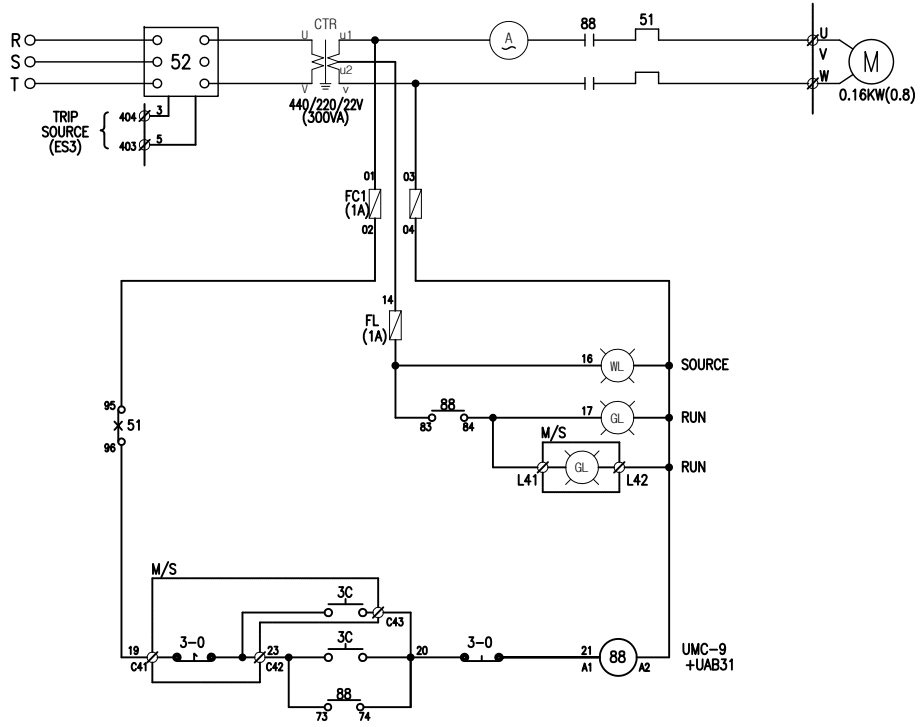

C41	C42	C43	L41	L42
RPB(START/STOP/RUN)				
MC-7				
P7432				

U	V	W
MOTOR		
T-2		
P7431		

R	S	T
SOURCE		
T-10		
P1403		

CIR. NO.	P7431
PROJECT NO. S5130	TITLE: DRY PROVISION STORE EXH. FAN
HME	SHEET NO. SD404

0	1	2	3	4	5
6	7	8	9	10	11

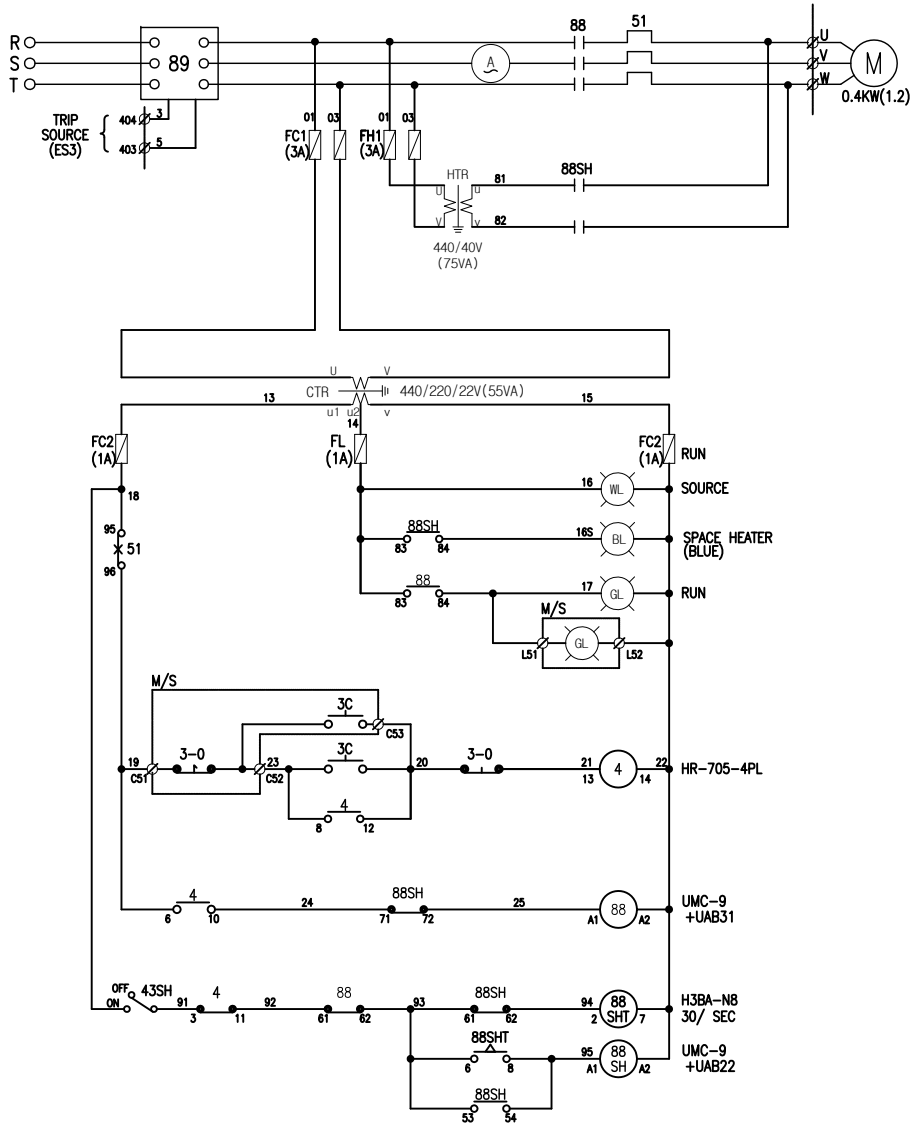

C51	C52	C53	L51	L52
RPB(START/STOP/RUN)				
MC-7				
P7442				

U	V	W
MOTOR		
T-2		
P7441		

R	S	T
SOURCE		
T-10		
P1403		

CIR. NO.	P7441
PROJECT NO. S5130	TITLE: PAINT STORE EXH. FAN
HME	SHEET NO. SD405

0	1	2	3	4	5
6	7	8	9	10	11

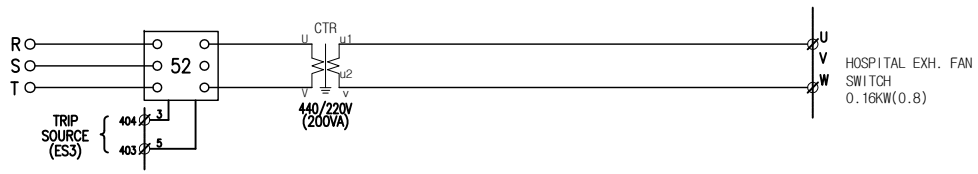

U	V	W
MOTOR		
T-2		
P7501		

R	S	T
SOURCE		
T-10		
P1403		

CIR. NO.	P7501
TITLE	HOSPITAL EXH. FAN
SHEET NO.	SD406

PROJECT NO. S5130

HME

0	1	2	3	4	5
6	7	8	9	10	11

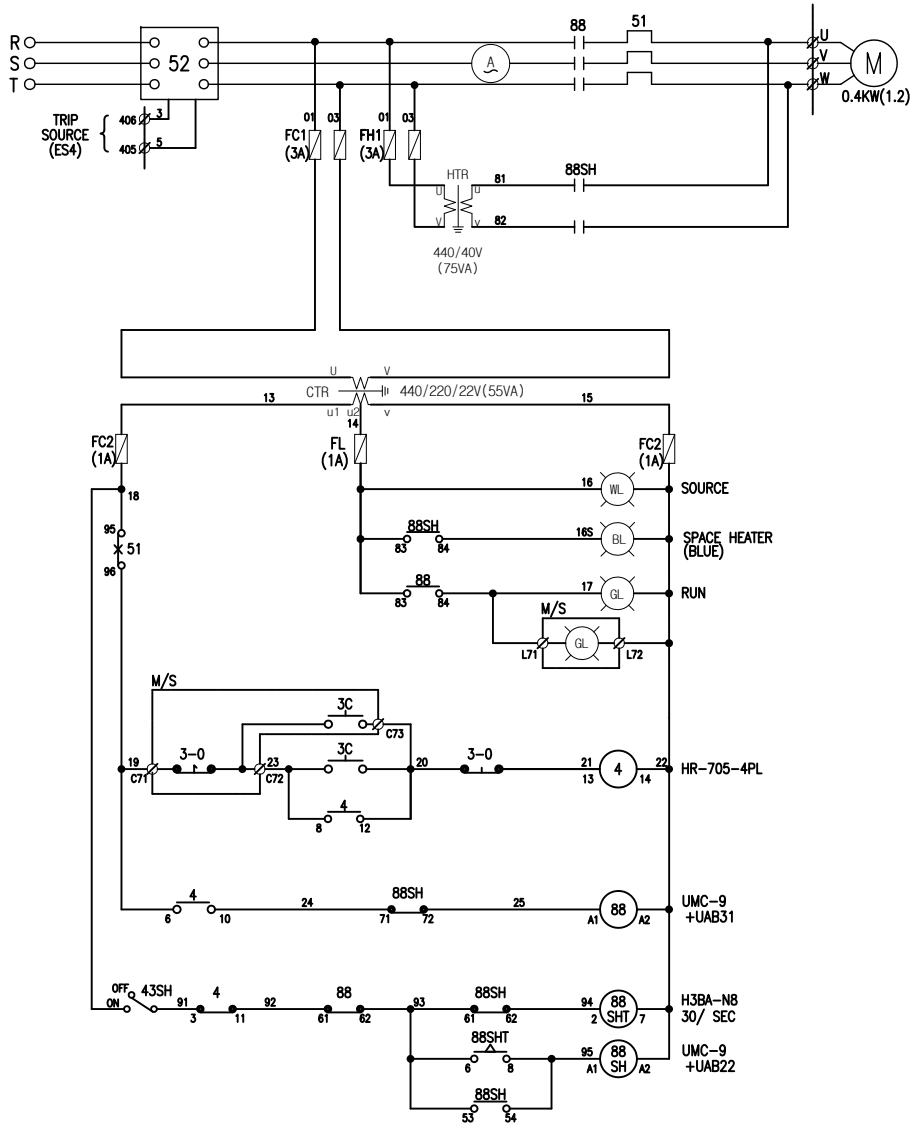

C71	C72	C73	L71	L72
RPB(START/STOP/RUN)				
MC-12				
P7512				

U	V	W
MOTOR		
T-2		
P7511		

R	S	T
SOURCE		
T-10		
P1403		

CIR. NO.	P7511
PROJECT NO. S5130	TITLE: DECK STORE EXH. FAN (ST'BD)
HME	SHEET NO. SD407

0	1	2	3	4	5
6	7	8	9	10	11

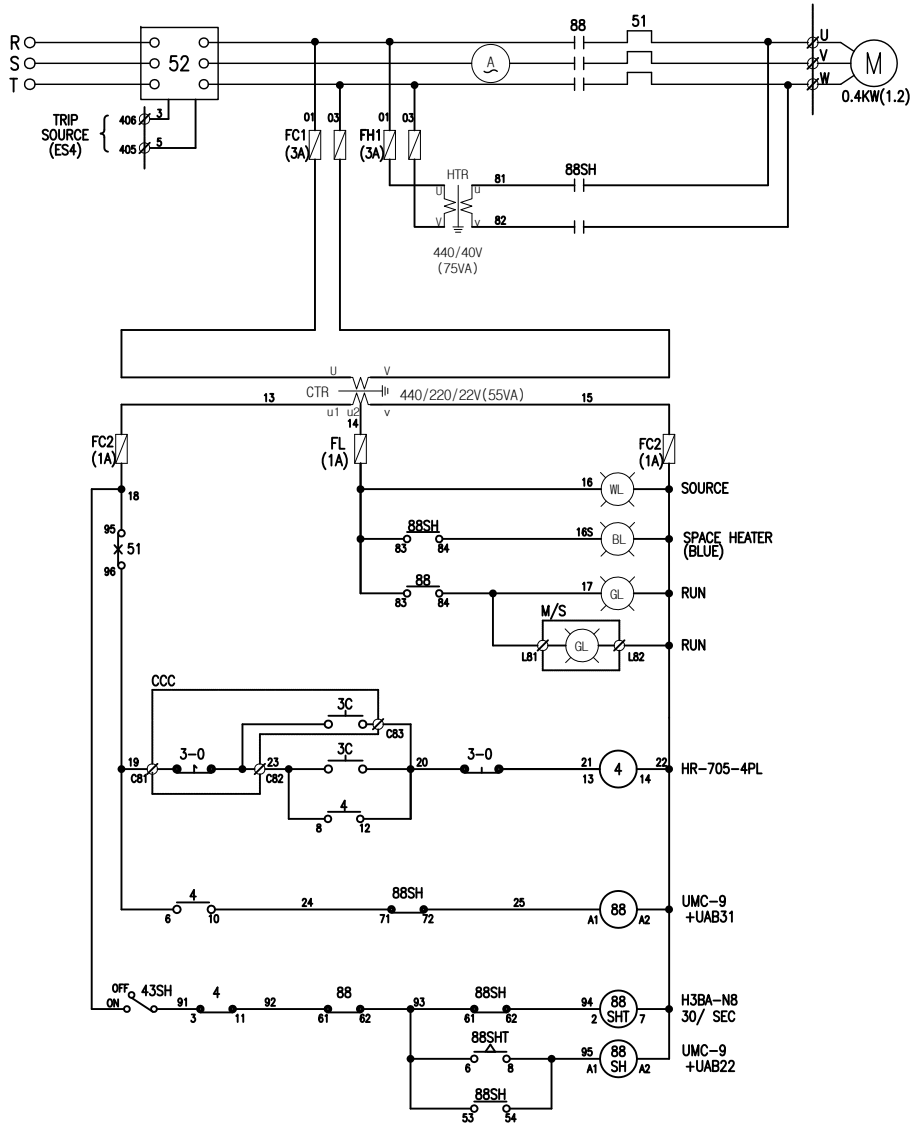

C81	C82	C83	L81	L82
RPB(START/STOP/RUN)				
MC-12				
P7512				

U	V	W
MOTOR		
T-2		
P7521		

R	S	T
SOURCE		
T-10		
P1403		

CIR. NO.	P7521
PROJECT NO. S5130	TITLE: DECK STORE EXH. FAN (PORT)
HME	SHEET NO. SD408

0	1	2	3	4	5
6	7	8	9	10	11

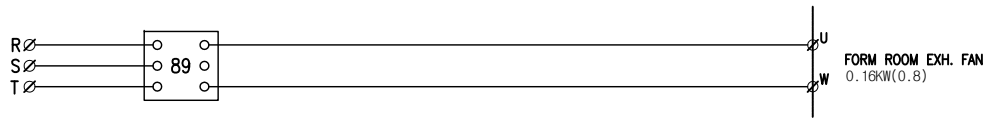

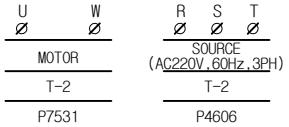

CIR. NO.	P7531
TITLE	FORM ROOM EXH. FAN
SHEET NO.	SD409

PROJECT NO. S5130

HME

0	1	2	3	4	5
6	7	8	9	10	11

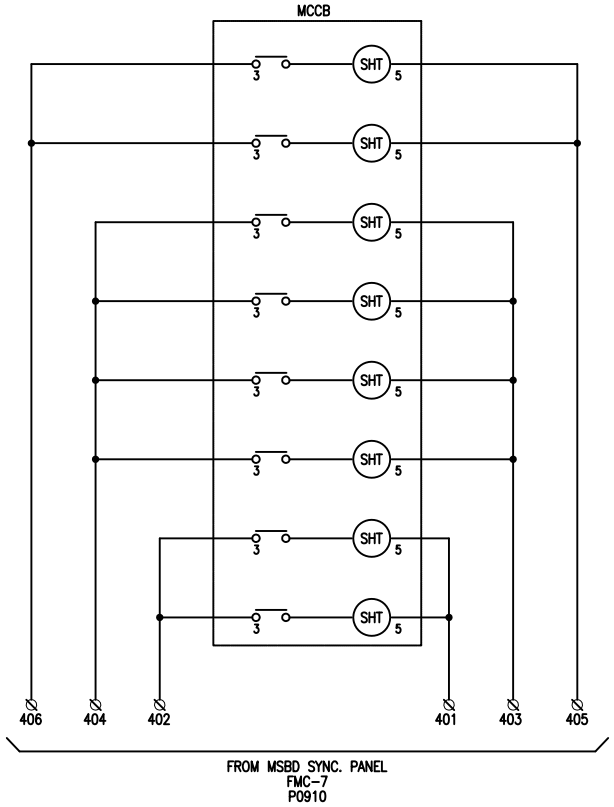

ES4	P7521 DECK STORE(S) EXH. FAN
ES4	P7511 DECK STORE(P) EXH. FAN
ES3	P7501 HOSPITAL EXH. FAN
ES3	P7441 PAINT STORE EXH. FAN
ES3	P7431 DRY PROVISION STORE EXH. FAN
ES3	P7421 SANITARY SPACE EXH. FAN
ES3+ES5	P7411 GALLEY SUPPLY FAN
ES3+ES5	P7401 GALLEY EXH. FAN

- NOTE -

*ES-3 : EM'CY STOP FOR ACCOM. PART FAN & GALLEY EQUIP'T
*ES-4 : EM'CY STOP FOR ON-DECK FAN
*ES-5 : EM'CY STOP FOR GALLEY EQUIP'T

0	1	2	3	4	5						
6	7	8	9	10	11						

PROJECT NO.	S5130	TITLE	EM'CY STOP CIRCUIT FOR NO.4 LGSP
	HME	SHEET NO.	SD410

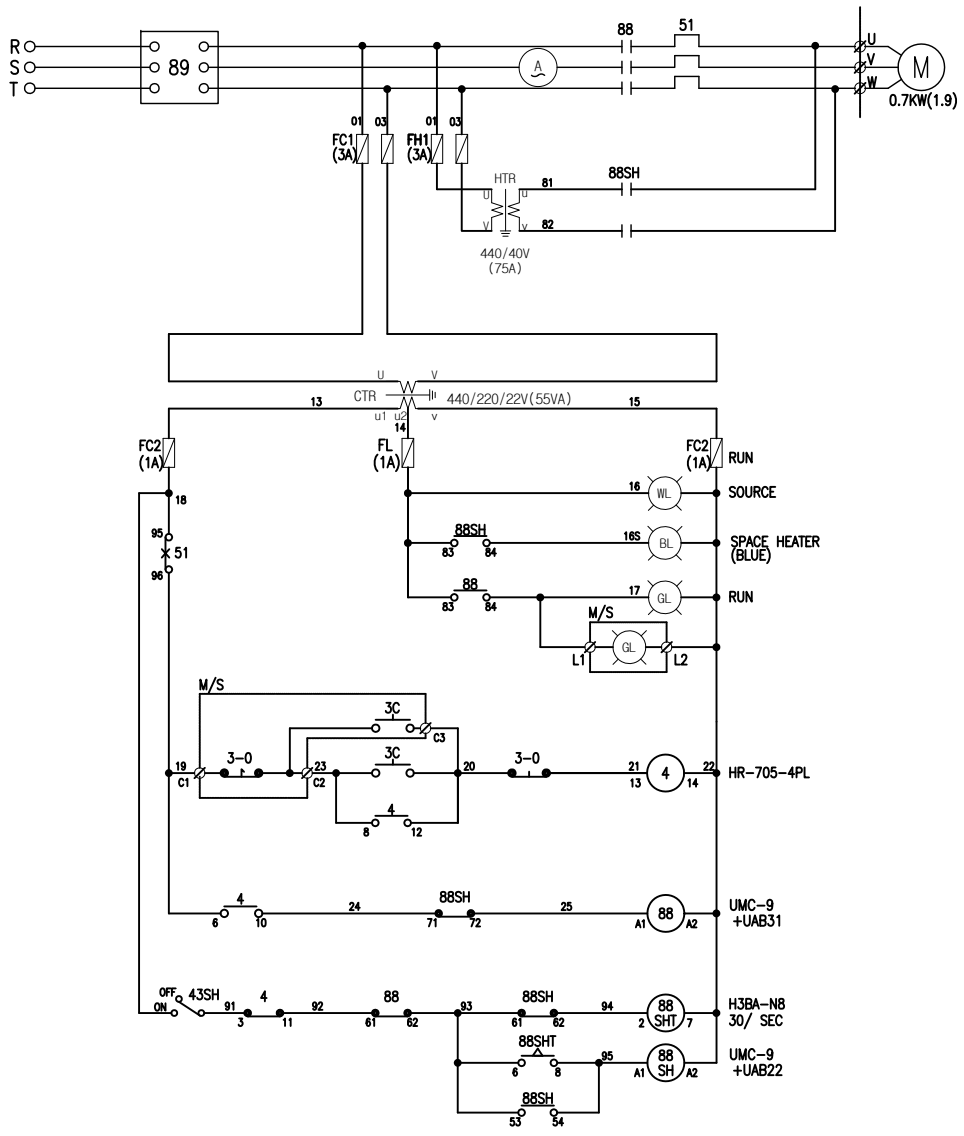

C1	C2	C3	L1	L2
RPB(START/STOP/RUN)				
MC-7				
P7602				

U	V	W
MOTOR		
T-2		
P7601		

R	S	T
SOURCE		
TA35		
P1707		

CIR. NO.	P7601
PROJECT NO. S5130	TITLE BOSUN STORE EXH. FAN
HME	SHEET NO. SD501

0	1	2	3	4	5
6	7	8	9	10	11

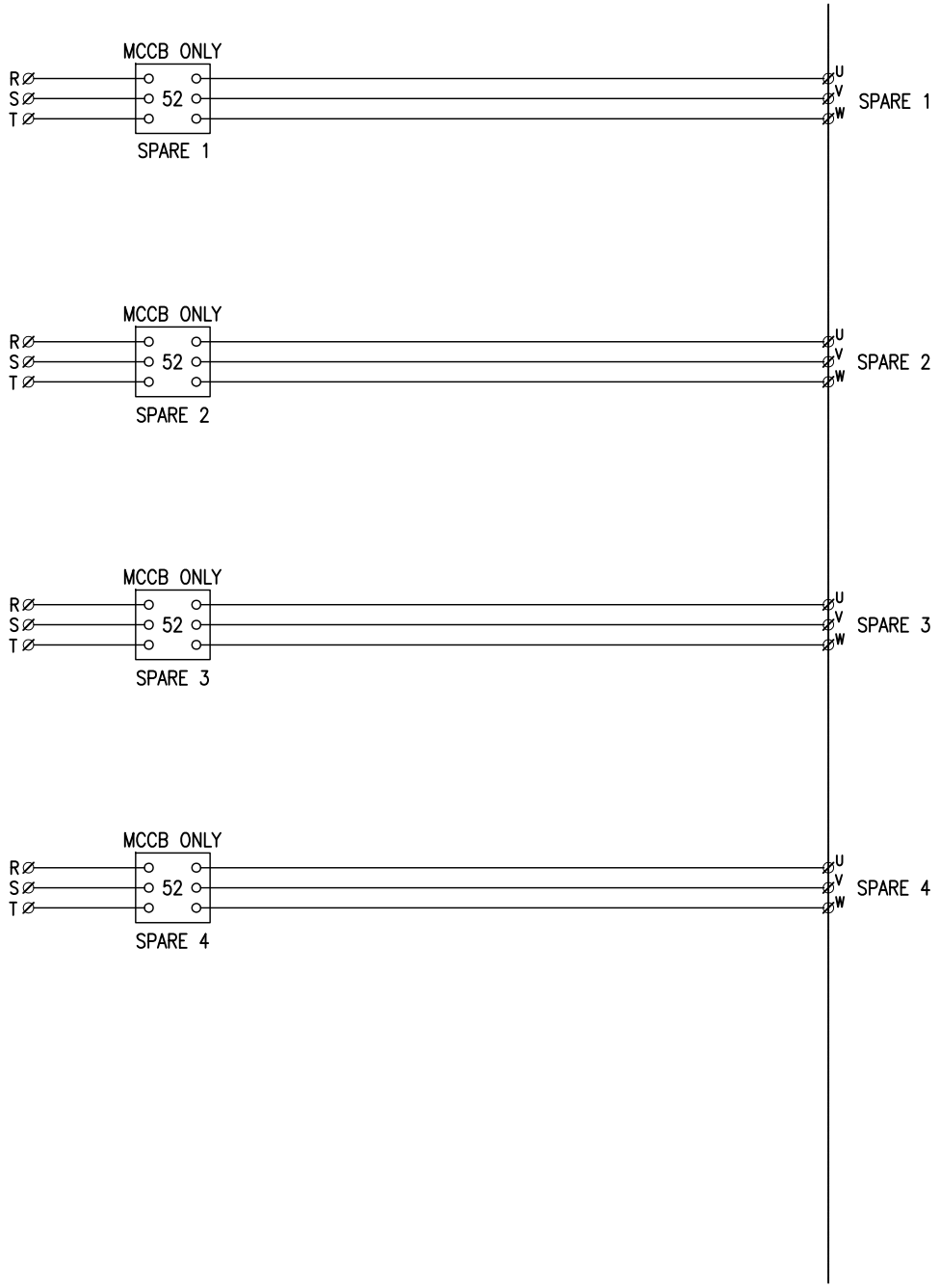

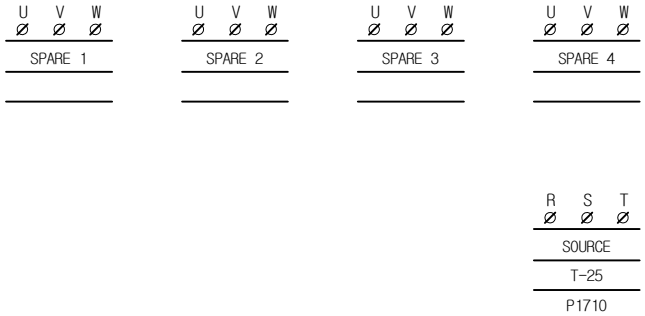

PROJECT NO. S5130		TITLE	NO.5 LGSP MCCB ONLY
HME		SHEET NO.	SD502

0	1	2	3	4	5
6	7	8	9	10	11

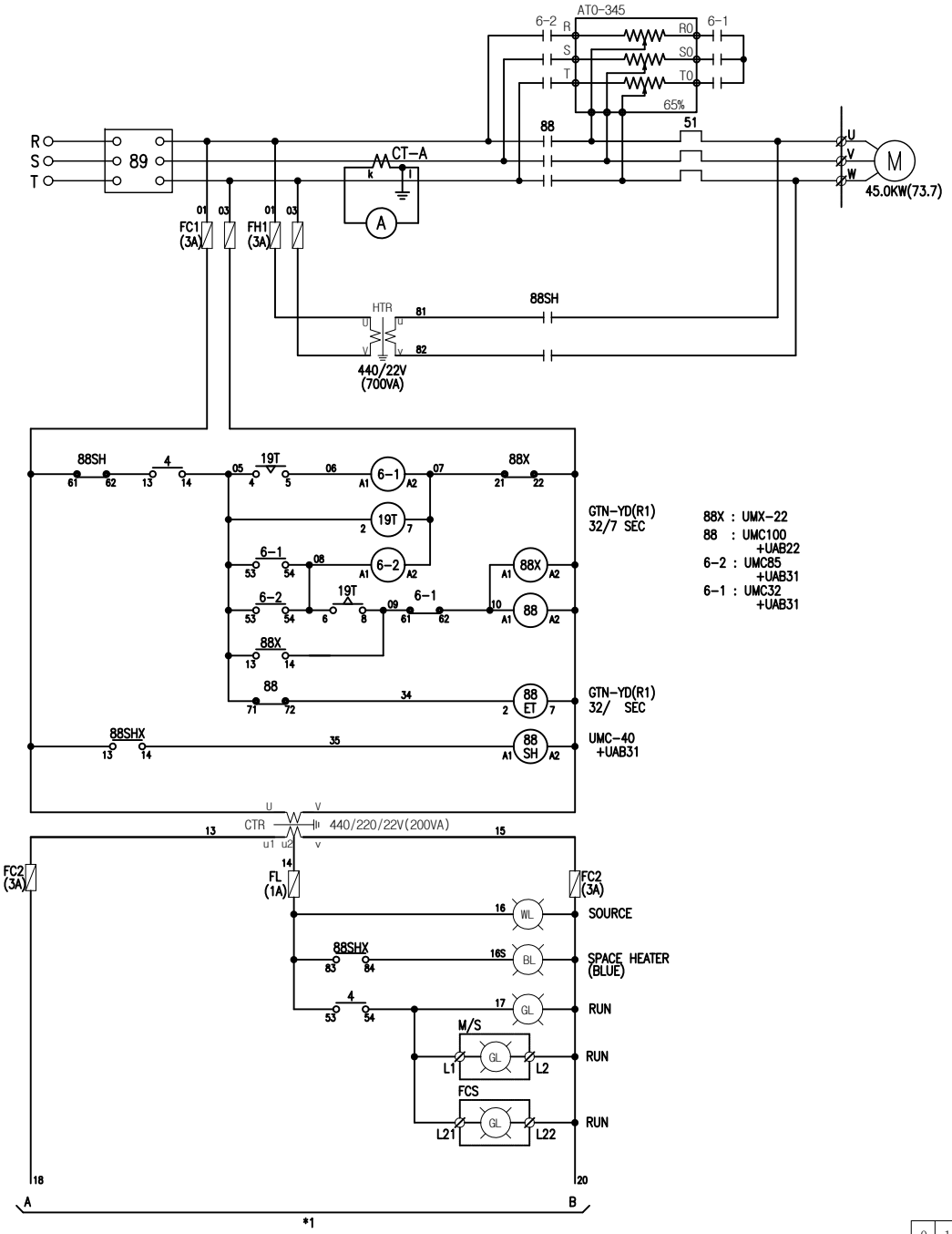

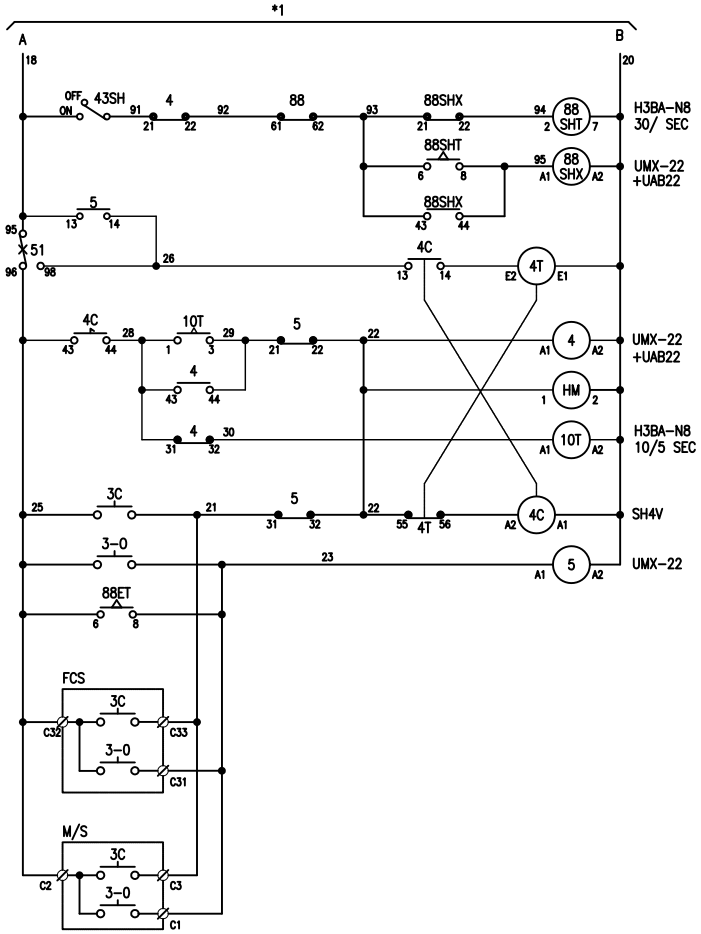

CIR. NO.	P8101
PROJECT NO. S5130	TITLE EM'CY FIRE PUMP
HME	SHEET NO. SDI01A

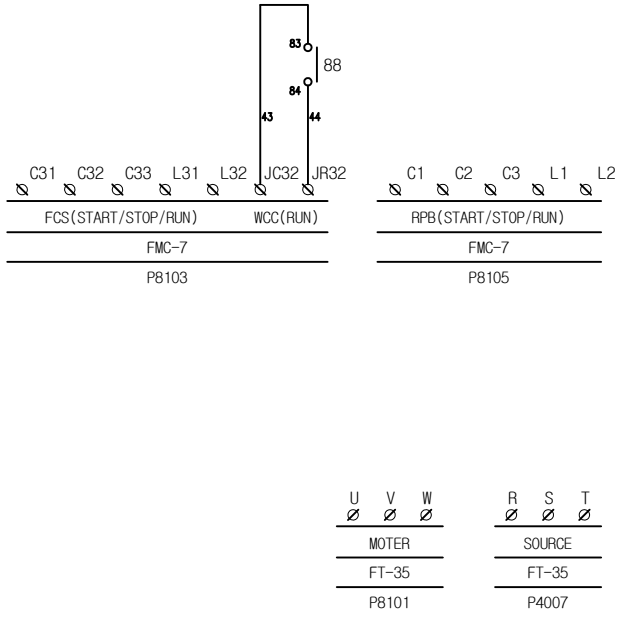

CIR. NO.	P8101
TITLE	EM'CY FIRE PUMP
SHEET NO.	SDI01B

PROJECT NO. S5130

HME

0	1	2	3	4	5
6	7	8	9	10	11

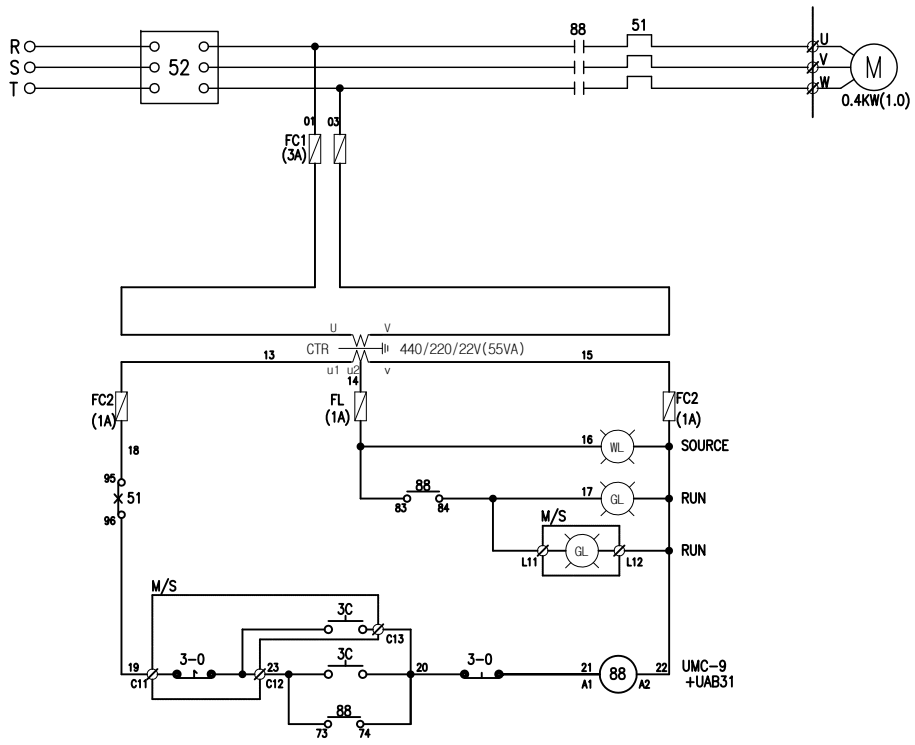

C11	C12	C13	L11	L12
RPB(START/STOP/RUN)				
MC-7				
P5510				

U	V	W
MOTOR		
T-2		
P5509		

R	S	T
SOURCE		
T-10		
P5508		

CIR. NO.	P5509
PROJECT NO. S5130	TITLE: E/R WORKWHOP WELDING AREA EXH. FAN
HME	SHEET NO. SDI02

0	1	2	3	4	5
6	7	8	9	10	11

NO.1 LGSP

	A1			
SD101	1	PS11		MC-2
	2	PS12		P6702
SD102	3	C21		MC-7
	4	C22		P6712
	5	C23		
	6	L21		
	7	L22		
SD103	8	PS31		MC-4
	9	PS32		P5703
SD103	10	PS41		MC-2
	11	PS42		P6732
	12			
	13			
	14			
	15			
	16			
	17			
	18			
	19			
	20			
	21			
	22			
	23			
	24			
	25			
	26			
	27			
	28			
	29			
	30			
	31			
	32			
	33			
	34			
	35			
	36			
	37			
	38			
	39			
	40			

NO.1 LGSP

	A2			
SD101	1	C11		MC-12
	2	C12		P6802
	3	C13		
	4	L11		
	5	L12		
SD105	6	C51		
	7	C52		
	8	C53		
	9	L51		
	10	L52		
	11	PS51		MC-2
	12	PS52		P6803
SD104	13	C41		MC-12
	14	C42		P6812
	15	C43		
	16	L41		
	17	L42		
SD107	18	C71		
	19	C72		
	20	C73		
	21	L71		
	22	L72		
	23	PS71		MC-2
	24	PS72		P6813
	25			
	26			
	27			
	28			
	29			
	30			
	31			
	32			
	33			
	34			
	35			
	36			
	37			
	38			
	39			
	40			

NO.2 LGSP

	A1			
SD201	1	R11		D-2
	2	T11		P6904
	3	E11		MC-2
	4	E12		P6907
	5	J11		MC-2
	6	J12		P6903
	7	TH11		D-1
	8	TH12		P6902
	9	S11		DC-2
	10	S12		P6906
	11	JN15		MC-12
	12	JC16		P6905
	13	RS12		
	14	RS11		
	15	JS12		
	16	JS11		
	17	JC12		
	18	JN12		
SD202	19	JC21		
	20	JN21		
	21	C21		MC-7
	22	C22		P6922
	23	C23		
	24	L21		
	25	L22		
	26			
	27			
	28			
	29			
	30			
	31			
	32			
	33			
	34			
	35			
	36			
	37			
	38			
	39			
	40			

NO.2 LGSP

	A2-1			
	1	JN35		MC-12
	2	JC36		P6915
	3	RS32		
	4	RS31		
	5	JS32		
	6	JS31		
	7	JC32		
	8	JN32		
SD204	9	JC41		
	10	JN41		
	11	C41		MC-7
	12	C42		P6932
	13	C43		
	14	L41		
	15	L42		

	A2-2			
SD203	1	R31		D-2
	2	T31		P6914
	3	E31		MC-2
	4	E32		P6917
	5	J31		MC-2
	6	J32		P6913
	7	TH31		D-1
	8	TH32		P6912
	9	S31		DC-2
	10	S32		P6916

YARD CABLE No.

YARD CABLE CORE No.

TERMINAL No.

T/B No.

CIRCUIT No.

0	1	2	3	4	5						
6	7	8	9	10	11						

PROJECT NO.	S5130	TITLE	CONTROL TERMINAL BLOCK ARRANGEMENT
HME		SHEET NO.	TB01

NO.2 LGSP

	A3			
SD205	1	R51		D-2 P7004
	2	T51		
	3	E51		MC-2 P7007
	4	E52		
	5	J51		MC-2 P7003
	6	J52		
	7	TH51		D-1 P7002
	8	TH52		
	9	S51		DC-2 P7006
	10	S52		
	11	JN55		MC-12 P7005
	12	JN56		
	13	RS52		
	14	RS51		
	15	JS52		
	16	JS51		
	17	JC52		
	18	JN52		
SD206	19	JC61		
	20	JN61		
	21	C61		MC-7 P7012
	22	C62		
	23	C63		
	24	L61		
	25	L62		
	26			
	27			
	28			
	29			
	30			
	31			
	32			
	33			
	34			
	35			
	36			
	37			
	38			
	39			
	40			

NO.2 LGSP

	A4			
SD207	1	R71		D-2 P7014
	2	T71		
	3	E71		MC-2 P7017
	4	E72		
	5	J71		MC-2 P7013
	6	J72		
	7	TH71		D-1 P7012
	8	TH72		
	9	S71		DC-2 P7016
	10	S72		
	11	JN75		MC-12 P7015
	12	JN76		
	13	RS72		
	14	RS71		
	15	JS72		
	16	JS71		
	17	JC72		
	18	JN72		
SD208	19	JC81		
	20	JN81		
	21	C81		MC-7 P7032
	22	C82		
	23	C83		
	24	L81		
	25	L82		
	26			
	27			
	28			
	29			
	30			
	31			
	32			
	33			
	34			
	35			
	36			
	37			
	38			
	39			
	40			

NO.2 LGSP

	A5			
SD201	1	JN13		MC12 P7104
	2	JC14		
SD203	3	JN33		
	4	JC34		
SD205	5	JN33		
	6	JC34		
SD207	7	JN33		
	8	JC34		
SD201	9	JR14		MC19 P7103
	10	JC15		
SD203	11	JR34		
	12	JC35		
SD205	13	JR54		
	14	JC55		
SD207	15	JR74		
	16	JC75		
SD209	17	C101		
	18	C102		
	19	C103		
	20	JR1		
	21	JC1		
	22	C91		MC-7 P7102
	23	C92		
	24	C93		
	25	L91		
	26	L92		
	27	201		FMC-7 P0909
	28	202		
	29			
	30			
	31			
	32			
	33			
	34			
	35			
	36			
	37			
	38			
	39			
	40			

NO.3 LGSP

	A1			
SD301	1	C11		MC-7 P7202
	2	C12		
	3	C13		
	4	L11		
	5	L12		
SD301	6	JN1		MC-7 P7310
	7	JC1		
SD302	8	JN2		
	9	JC2		
SD301	10	JR1		MC-12 P7311
	11	JC1		
SD302	12	C21		
	13	C22		
	14	C23		
	15	JR21		
	16	JC21		
	17	E2		FMC-2 P7214
	18	E1		
	19	SV1		MC-2 P7212
	20	SV2		
	21	C31		MC-7 P7213
	22	C32		
	23	C33		
	24	L31		
	25	L32		
	26	C41		MC-7 P7217
	27	C42		
	28	C43		
	29	L41		
	30	L42		
SD303	31	SW1		MC-7 P7321
	32	SW2		
	33	JR31		
	34	JC31		
	35			
	36			
	37			
	38			
	39			
	40			

YARD CABLE No.

YARD CABLE CORE No.

TERMINAL No.

T/B No.

CIRCUIT No.

0	1	2	3	4	5
6	7	8	9	10	11

PROJECT NO.	S5130	TITLE	CONTROL TERMINAL BLOCK ARRANGEMENT
HME		SHEET NO.	TB02

NO.4 LGSP

	A1			
SD401	1	C11		MC-12 P7402
	2	C12		
	3	C13		
	4	L11		
	5	L12		
SD402	6	C21		
	7	C22		
	8	C23		
	9	L21		
	10	L22		
SD403	11	C31		MC-7 P7422
	12	C32		
	13	C33		
	14	L31		
	15	L32		
SD404	16	C41		MC-7 P7432
	17	C42		
	18	C43		
	19	L41		
	20	L42		
SD405	21	C51		MC-7 P7442
	22	C52		
	23	C53		
	24	L51		
	25	L52		
SD406	26	C71		MC-12 P7512
	27	C72		
	28	C73		
	29	L71		
	30	L72		
SD407	31	C81		
	32	C82		
	33	C83		
	34	L81		
	35	L82		
	36			
	37			
	38			
	39			
	40			

NO.4 LGSP

	A2			
SD410	1	401		FMC-7 P0910
	2	401		
	3	402		
	4	402		
	5	403		
	6	403		
	7	403		
	8	403		
	9	404		
	10	404		
	11	404		
	12	404		
	13	405		
	14	405		
	15	406		
	16	406		
	17			
	18			
	19			
	20			
	21			
	22			
	23			
	24			
	25			
	26			
	27			
	28			
	29			
	30			
	31			
	32			
	33			
	34			
	35			
	36			
	37			
	38			
	39			
	40			

NO.5 LGSP

	A1			
SD501	1	C1		MC-7 P7602
	2	C2		
	3	C3		
	4	L1		
	5	L2		
	6			
	7			
	8			
	9			
	10			
	11			
	12			
	13			
	14			
	15			
	16			
	17			
	18			
	19			
	20			
	21			
	22			
	23			
	24			
	25			
	26			
	27			
	28			
	29			
	30			
	31			
	32			
	33			
	34			
	35			
	36			
	37			
	38			
	39			
	40			

YARD CABLE No.
YARD CABLE CORE No.
TERMINAL No.
T/B No.
CIRCUIT No.

0	1	2	3	4	5
6	7	8	9	10	11

PROJECT NO.	S5130	TITLE	CONTROL TERMINAL BLOCK ARRANGEMENT
	HME	SHEET NO.	TB03

EM'CY FIRE PUMP

	A1			
SD101B	1	C1		FMC-7
	2	C2		P8105
	3	C3		
	4	L1		
	5	L2		
	6	C31		FMC-7
	7	C32		P8103
	8	C33		
	9	L31		
	10	L32		
	11	JC32		
	12	JR32		
	13			
	14			
	15			
	16			
	17			
	18			
	19			
	20			
	21			
	22			
	23			
	24			
	25			
	26			
	27			
	28			
	29			
	30			
	31			
	32			
	33			
	34			
	35			
	36			
	37			
	38			
	39			
	40			

E/R WORKWHOP WELDING AREA EXH. FAN

	A1			
SD102	1	C11		MC-7
	2	C12		P5510
	3	C13		
	4	L11		
	5	L12		
	6			
	7			
	8			
	9			
	10			
	11			
	12			
	13			
	14			
	15			
	16			
	17			
	18			
	19			
	20			
	21			
	22			
	23			
	24			
	25			
	26			
	27			
	28			
	29			
	30			
	31			
	32			
	33			
	34			
	35			
	36			
	37			
	38			
	39			
	40			

FCS

	A1			
ESSD1	1	E1	1	FMC-19
	2	E2	2	P0901
	3	E5	3	
	4	E6	4	
	5	E7	5	
	6	E8	6	
	7	E11	7	
	8	E12	8	
	9	E13	9	
	10	E14	10	
	11	E17	11	
	12	E18	12	
	13	E19	13	
	14	E20	14	
	15	E3	1	FMC-12
	16	E4	2	P0902
	17	E9	3	
	18	E10	4	
	19	E15	5	
	20	E16	6	
	21	E21	7	
	22	E22	8	
SPARE	23	E23		
	24	E24		
	25			
	26			
	27			
	28			
	29			
	30			
	31			
	32			
	33			
	34			
	35			
	36			
	37			
	38			
	39			
	40			

FCS

	A2			
ESSD1	1	C11	1	MC-19
	2	C12	2	P2325
	3	C13	3	
	4	L11	4	
	5	L12	5	
	6	JC12	6	
	7	JR12	7	
	8	C11	1	MC-12
	9	C12	2	P2306
	10	C13	3	
	11	JC12	4	
	12	JR12	5	
	13	C21	8	MC-19
	14	C22	9	P2325
	15	C23	10	
	16	L21	11	
	17	L22	12	
	18	JC22	13	
	19	JR22	14	
	20	C21	6	MC-12
	21	C22	7	P2306
	22	C23	8	
	23	JC22	9	
	24	JR22	10	
	25	C31		FMC-7
	26	C32		P8103
	27	C33		
	28	L31		
	29	L32		
	30	JC32		
	31	JR32		
	32	C31		FMC-7
	33	C32		P8104
	34	C33		
	35	JC32		
	36	JR32		
	37			
	38			
	39			
	40			

YARD CABLE No.
YARD CABLE CORE No.
TERMINAL No.
T/B No.
CIRCUIT No.

0	1	2	3	4	5
6	7	8	9	10	11

PROJECT NO.	S5130	TITLE	CONTROL TERMINAL BLOCK ARRANGEMENT
HME		SHEET NO.	TB04

SHIP NO.	SPARE PARTS LIST FOR	SET PER VESSEL
S5130	LOCAL GROUP STARTER & INDIVIDUAL STARTER	1SET PER VESSEL

ITEM NO.	NAME OF PARTS	OUT LINE	SPECIFICATION	SPARE	REMARK
1	MOLDED CIRCUIT BRAKER	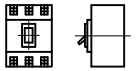	UAB-100R, FDC TYPE 100/15A	2	HYUNDAI
2	MOLDED CIRCUIT BRAKER	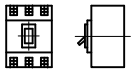	UAB-100R, FDC TYPE, SHT 220V, 100/15A	2	HYUNDAI
3	MOLDED CIRCUIT BRAKER	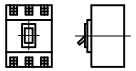	UAB-100R, PC TYPE 100/30A	2	HYUNDAI
4	MOLDED CIRCUIT BRAKER	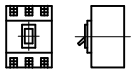	UAB-100R, PC TYPE 100/60A	2	HYUNDAI
5	DISCON SWITCH	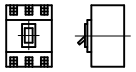	UAD-100R, FDC TYPE 100/100A	2	HYUNDAI
6	MAGNETIC CONTACTOR	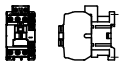	UMC-32 AC220V	3	HYUNDAI
7	AUX. RELAY	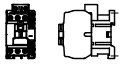	UMX22NS AC220V	2	HYUNDAI
8	AUX. RELAY	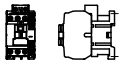	UMX22NS AC440V	2	HYUNDAI
9	AUX. RELAY	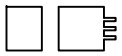	HR-705-4PL AC220V	2	CACON
10	TIMER	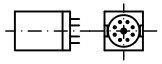	H3BA-N8 AC220V	2	KACON

SHIP NO.	SPARE PARTS LIST FOR	SET PER VESSEL
S5130	LOCAL GROUP STARTER & INDIVIDUAL STARTER	1SET PER VESSEL

ITEM NO.	NAME OF PARTS	OUT LINE	SPECIFICATION	SPARE	REMARK
11	TIMER	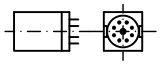	GTN-YD AC440V	2	LOXCO
12	FUSE		SB-C1 1A	10	SB-FUSE
13	FUSE		SB-C1 3A	10	SB-FUSE
14	PUSH BUTTON SWITCH	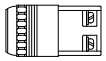	YSAP12-11G (GREEN,1A1B)	3	YONGSUNG
15	PUSH BUTTON SWITCH	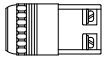	YSAP12-11R (RED,1A1B)	3	YONGSUNG
16	PILOT LAMP	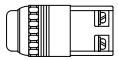	YSPL2-024AWW ,AC24V (WHITE)	3	YONGSUNG
17	PILOT LAMP	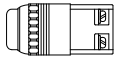	YSPL2-024AGW ,AC24V(GREEN)	3	YONGSUNG
18	PILOT LAMP	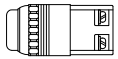	YSPL2-024AYW ,AC24V(YELLOW)	2	YONGSUNG
19	BULB	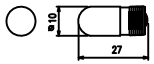	E-10 (AC 24V, 1W)	20	YONGSUNG
20	SPARE PART BOX	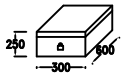	COLOR : 7.5 BG 7/2	1	

PROJECT No.	S5130	TITLE	SPARE PART LIST
	HME	SHEET No.	SP1

LOCAL GROUP STARTER & INDIVIDUAL STARTER